Gc
929.2
El56e
1163333

M. L.

GENEALOGY COLLECTION

ALLEN COUNTY PUBLIC LIBRARY
3 1833 01239 3416

Digitized by the Internet Archive
in 2018

https://archive.org/details/ellingfamiliesfr00elli

THE ELLING FAMILIES

FROM 1660 IN GERMANY TO 1960 IN AMERICA

WITH SOME INFORMATION ON THE BAKER AND BEAL FAMILIES
OF ILLINOIS AND NORTHEASTERN KANSAS

THE AUTHOR

EDWARD ELLING

THE ELLING FAMILIES

FROM 1660 IN GERMANY TO 1960 IN AMERICA

WITH SOME INFORMATION ON THE BAKER AND BEAL FAMILIES OF ILLINOIS AND NORTHEASTERN KANSAS

BY

EDWARD H. ELLING

Printed by
Capps and Clark Printing Co.
Kansas City, Missouri
1961

Copies of this book may be obtained by sending your order to Mr. Edward Elling, 7446 Village Dr., Prairie Village 15, Kansas Price $6.00

Copyright, 1961
by
Edward H. Elling

Printed in the U. S. A.

PREFACE

For an amateur, like me, writing a family history has been an experience. The ups and downs have been extreme. In this connection, in speaking of the ups and downs, I am referring to my progress in getting the information together and also my enthusiasm for the whole project. It is not surprising that a fairly close relationship exists between these two factors. I have been so completely dependent upon cousins for information on the various branches, and if you run into cousins that have no interest in a family history, then you are going to have problems.

1163333

Fortunately, nearly all of the cousins that I corresponded with, have shared my enthusiasm for this project. Many of them have sent to me complete character sketches of their parents. It is this sort of assistance that has prevented my account of the first and second chapters from being a mere record of names and dates. The information on the people in the first two chapters has been from relatives "who were there", so to speak. Edward J. Elling and Carl G. Elling, both second generation, provided the information on their father and mother, Frederick and Johanna Baker Elling. Without the assistance provided by the relatives in the third generation, I could never have supplied the information on the sons and daughters of Frederick and Johanna Elling. It has been a family project from start to finish. I could never have done it alone.

E. H. E.

CONTENTS

PART ONE

THE FREDERICK ELLING FAMILY AND DESCENDENTS

page

Chapter I - The German Ancestors of Frederick Elling 1

Chapter II - The First Generation 19

Chapter III - The Second Generation 24

Chapter IV - The Third Generation 38

Chapter V - The Fourth Generation 47

PART TWO

THE BAKER AND BEAL FAMILIES AND DESCENDENTS

Chapter VI - The German Ancestors of The Bakers 50

Chapter VII - The First Generation 52

Chapter VIII - The Second Generation 59

Chapter IX - The Third Generation 61

Chapter X - The Fourth Generation 63

PICTURES

	Page
Surveyors Chart of Jettebrock	6-a
Altar of the Evang.-Luth. Church in Dorfmark	6-b
Christening Font of the Evang.-Luth. Church in Dorfmark	6-c
Map of Dorfmark Area	9-a
Mr. Frederick Elling	19-a
Mrs. Johanna Baker Elling	19-b
Chart of Gristmill	21-a
Mr. and Mrs. Phillip Klamm and Family	25-a
Mr. George F. Elling	25-b
Mr. and Mrs. George F. Elling	25-c
Mr. and Mrs. Bernard Elling and Family	25-d
Mr. and Mrs. John U. Fisher	27-a
Mr. and Mrs. Albert Wright	29-a
Miss Minnie Elling	31-a
Minnie, Anna and Ricka Elling	31-b
Mr. and Mrs. Edward J. Elling	32-a
Mr. and Mrs. Otto H. Elling	33-a
Mr. and Mrs. Albert Elling	35-a
Mr. and Mrs. Carl G. Elling	35-b
Map of Sulbeck - Einbeck Area	51-a
Mr. and Mrs. August Baker	53-a
Mr. and Mrs. Wm. H. Baker	55-a
Mr. and Mrs. Fred Meyers	57-a
Mrs. Georgiana Baker Beal	57-b
Mr. William Beal	57-c
Mr. Albert Beal	59-a
Mrs. Albert Beal	59-b
Mrs. Anne Beal Regan	59-c
Mr. James Regan	59-d
Mr. and Mrs. Henry Beal	60-a
Mr. William Beal	60-b
Mrs. Myrtle Stafford Beal	60-c
Mr. and Mrs. Wm. Baker	60-d
Mr. and Mrs. Christopher Baker	60-e
Mr. and Mrs. Frank Baker	60-f
Mr. and Mrs. August Baker	60-g

EXPLANATION

Perhaps a word about the system that I have used would be desirable. I suppose that there are many methods of arranging the information in a book of this nature. The one that I used is not complicated. It seemed to me to be the most logical arrangement and also the easiest for the reader to follow.

In the system that I have used, a particular chapter will cover the people of a given generation. For example, all of the people of the third generation are discussed or mentioned in the fourth chapter. The families of brothers and/or sisters will be grouped together within the chapter, but the discussion of their children will be in the following chapter.

Let's look at a specific case. On page 49 we have:

108. b Martin Jan 5 b. Feb. 19, 1957

The number 108 is arbitrarily assigned. All of the individuals that lived beyond infancy will have such a number. Once a number is assigned to a particular individual, it stays with that individual throughout the book. It is a convenient and exact method of following lines from one generation to the next. The number of children are indicated alphabetically, Martin Jan is the second child, hence the "b" proceeding his name. The "5" following the name means that he is in the fifth generation. He was born on Feb. 19, 1957. Martin Jan's father is Mr. Joe Elling Terrett, fourth generation. The number assigned to Joe Elling Terrett is 56. His mother is Margaret Terrett, His grandfather is Otto Elling, and Joe Elling Terrett's great-grandfather is Frederick Elling of the first generation.

CHAPTER I

THE GERMAN ANCESTORS OF FREDERICK ELLING

The information that later proved to be helpful in establishing a starting point in Germany was obtained from the records of St. Paul's Lutheran Church in Monee, Illinois. The records of this church reveal that Friedrich Elling was born on Oct. 14, 1829, in Riepe, which is located near Dorfmark. Dorfmark is a village located 8 miles southwest of Soltau in Hannover Province. There is other evidence which indicated that Friedrich Elling was born in Bremen, Germany; however, it was subsequently established that this information was incorrect.

Referring again to the records of the St. Paul's Lutheran Church in Monee, Illinois, we find that George Friedrich Heinrich Elling was born on August 30, 1858 and died in infancy on June 16, 1860. His parents were George Heinrich Christoph Elling and Katharina (Franzen) Elling. Mr. Christoph Elling was born on Oct. 15, 1822 in Fallingbostel, Hannover Province, Germany. These church records were written in longhand, that was more German than English. I interpreted the name of the village to be Fallingbostel. My interpretations is probably incorrect. Information from records received later indicate that Mr. Christoph Elling was born in the small village of Mengebostel, which is located just on the edge of Dorfmark. Also, the records from Germany indicate that Christoph Elling was born on Oct. 15, 1821, instead of Oct. 15, 1822. One other discrepancy that should be pointed out at this time, the records in Monee indicate that Frederick Elling was born on Oct. 14, 1829. The certified copies of his baptism and also of his confirmation, list the date of his birth as Nov. 14, 1829.

In Sept., 1959, Mr. Adolf Elling, 24 L Street, Salt Lake City, Utah, gave me the following information regarding his ancestors.

His Great Grandfather —

Heinrich Jacob Elling, born Nov. 13, 1781.

His Grandfather—

Peter Johann Elling, born Aug. ____, 1825, at Riepe, Dorfmark.

His Grandmother—

Johanna Caroline Gorneman, born Oct. 19, 1813, at Northeim.

In response to my inquiries, several individuals over in Germany, contributed the information that they had, or were able to obtain. Because they have a direct bearing on this problem, and because each of them either assisted me in getting on the right track over in Germany, or confirmed information that I was able to obtain later from some entirely different source, I am sure that the following letters will be of interest to the reader.

Mr. Edward H. Elling
7446 Village Drive
Prairie Village 15,
Kansas, U. S. A.

Bremen, June 9, 1959

Dear Mr. Elling

After asking my relations I'll answer to your letter of February 23, and to the letter from May 3, send to my father O. Elling, Bremen. (My father has died in 1954.)

I must tell you between our ancestors we cannot find both Georg Friedrich Christoph Elling, born on Oct. 15, 1822 and Friedrich Elling, born on Oct. 14, 1829.

Indeed the christian names we have also between them, but the birthdays and the years are not right. It is only the question, whether the personal data you have told are exactly.

To your information I'll give you the personal data of my ancestors:

My grandfather was

Fritz Heinrich-Friedrich Wilhelm Elling
born on Dec. 24, 1858 at Dorfmark

(Dorfmark is a little village in the district between the rivers Elbe and Weser in the province Hannover).

Two half-brothers of my grandfather

Christoph Elling
and Heinrich Elling
both born nearly 1850

have gone to Minnesota about 1884. Rather we have had never a connection with them or their descendants.

The father of my grandfather was

Heinrich Friedrich Elling
born on Jan. 23, 1821 at Jettebruch (5km nearly Dorfmark).

His three brothers were

Hans Wilhelm Elling
born ? died in 1845

Hans Jacob Elling
born about 1810-11

Heinrich Christoph Elling
born ? died in 1886.

This three brothers have not gone to the U. S. A.

After you now at the first time have told in your letter of May 3, that Friedrich Elling has lived in Dorfmark, it may possible that we can find somewhat if you are able to give another information.

I think I'll hear soon from you.

I'm interested to your family history and would be glad to receive a copy of your book.

Sincerely,
Karl-Heinz Elling
Mooriemerstr. 5
Bremen-Huchting
Germany

Translation

Eduard Elling
Dangerstrasse 4
Hannover-Herrenhausen

September 1, 1959

Mr. Edward H. Elling
7446 Village Drive
Prairie Village, Kansas

Dear Mr. Elling:

Although I was quite surprised to receive a letter from a namesake in America, I was nevertheless very pleased to learn that our name is also represented in the new world.

Of course, I shall be happy to assist you in your research activities and I have immediately contacted

1. the State Vicary in Hannover and the Church Vital Statistics Office in Hannover,

2. the Evangelical Church Communities in Dorfmark and Fallingbostel.

In spite of the considerable time elapsed, the above offices were not able to provide any information on the two names searched by you. Only the Parsonage in Dorfmark may have found some clue, the copy of that letter you find on the reverse side. Should this be the person you are looking for, I should be glad, if you wish, to again get in touch with the Parsonage in Dorfmark, so that the search can be continued there. In that case I should like to receive your reply.

I am sorry I have not been able to be of more help to you in the search for your ancestors, but hope the book can be completed just the same.

With best regards,

s/ Eduard Elling.

Translation

PARSONAGE DORFMARK
Kreis Fallingbostel

Dorfmark, July 20, 1959

Dear Mr. Elling:

In reply to your letter of June 30, I am sorry to inform you that the two gentlemen mentioned by you, Georg Friedrich Christoph Elling and Friedrich Elling do not show up in our Church Records.

Only in the Confirmation Register of the Year 1836 did I find the name Georg Heinrich Christoph Elling, born October 15, 1821. That would make the first and the last of the given names coincide with the one of the names mentioned by you, also the birth date is the same.

In the Birth Records I found the following information regarding the Parents of the above named (person):

> Georg Heinrich Christoph Elling, son of the Tenant Heinrich Jacob Elling and his wife Catherine Magdalene, nee Kastens, at Mengebostel (near Dorfmark).

A search in the Church Records is difficult, for one thing, the church records in those days did not contain an alphabetical register, and also, since no other information regarding the two Elling men is given, promising results of any search will be difficult. The church records contain all pertinent church functions, such as Christenings, Confirmation, Marriage and Burial. As long as any of these events and their particular date remain unknown, the only way to conduct any search would be to just look through all the records covering that certain period, a tedious undertaking, which may take several days, and possibly weeks.

Very truly yours,

/s Friedrich True, Deacon.

Translation

GERMAN COOPERATIVE OF
GENERALOGICAL SOCIETIES
Am Neustaedter Kirchhof 3
Hannover, Germany

September 17, 1959
Ref.No. : 3959

Mr. Edward H. Elling,
7446 Village Drive
Prairie Village, Kansas.

Dear Mr. Elling:

In reply to your letter of May 3 we like to inform you that the Deutsche Arbeitsgemeinschaft Genealogischer Verbaende itself does not conduct individual family research, rather it is the top organization of all genealogical societies in Germany.

We would therefore suggest to obtain the services of a Family Researcher concerning the data desired by you. We can name you for the Hannover Area

Mr. Oskar Hausbrand,
Oberbergrat a.D. (Retired Mining Official)
BARSINGHAUSEN/DEISTER
Poststrasse 32 (GERMANY).

Yours truly,

s/ Dr. Langer.

(20a) Barsinghaughhausen, Poststr. 32,
Germany-West, den Dez. 16, 1959.

Dear Mr. Elling!

Yesterday evening I am returned from Dorfmark and Fallingbostel. Ich think that the results are very good. To day I send jou:

1) 6 Certifications over jour ancestors Elling in Jettebruch. I have found them in the church-book and dictated the registerings to Mr. True, because much is to read difficulty.

2) 9 certifications of death cases from pastorate Walsrode concerning also jour direct ancestors. The contain very interesting accounts.

3) A chart of Jettebrock. The farm 211 belongs since centuries to jour
130
ancestors. 1876 was the possessor Heinrich Friedrich Christoph Elling, Vollhofer (= large farmer.) The house has the Nr. 5. Magnitude: 67 ha, 72a and 60 m². To day Missis Irmgard Gevers, born Elling, possesses the farm. Would jou write to her? That all I have learnt through the Cataster-office in Fallingbostel, which has made for me the chart.

4) Two Photographs from the interior of the church of Dorfmark. Over this christening font have been baptized many of jour ancestors through centuries. I have bought them from Dr. Muller-Naumburg in Fallingbostel, the son of the famous politician Dr. Muller-Naumburg. The church of Dorfmark outside is not photographed.

Then I have visited Mr. Hans Stuhlmacher in Fallingbostel, the best man for the history of the country. His book, The Heidmark costs 300 till 500 DM, and his book, The Kreis Fallingbostel 40 - 60 DM, if one has the fortune, to find someone, who is willing, to sell the books.

I thank jou, that I shall have your Family History. No book for the churches, who have only little interest for that, but I beg jou, to present one book Mr. Hans Stuhlmacher, since 40 jears Archivpfleger for the county Fallingbostel, in Fallingbostel, Michelsenstr., and then one book for the "familienkundlichen Abend" in Hannover.

I am sorry to say, that there are no old tombstones on the cemetery of Dorfmark.

Every certification costs DM1 if with our without godparents and the duty for searching.

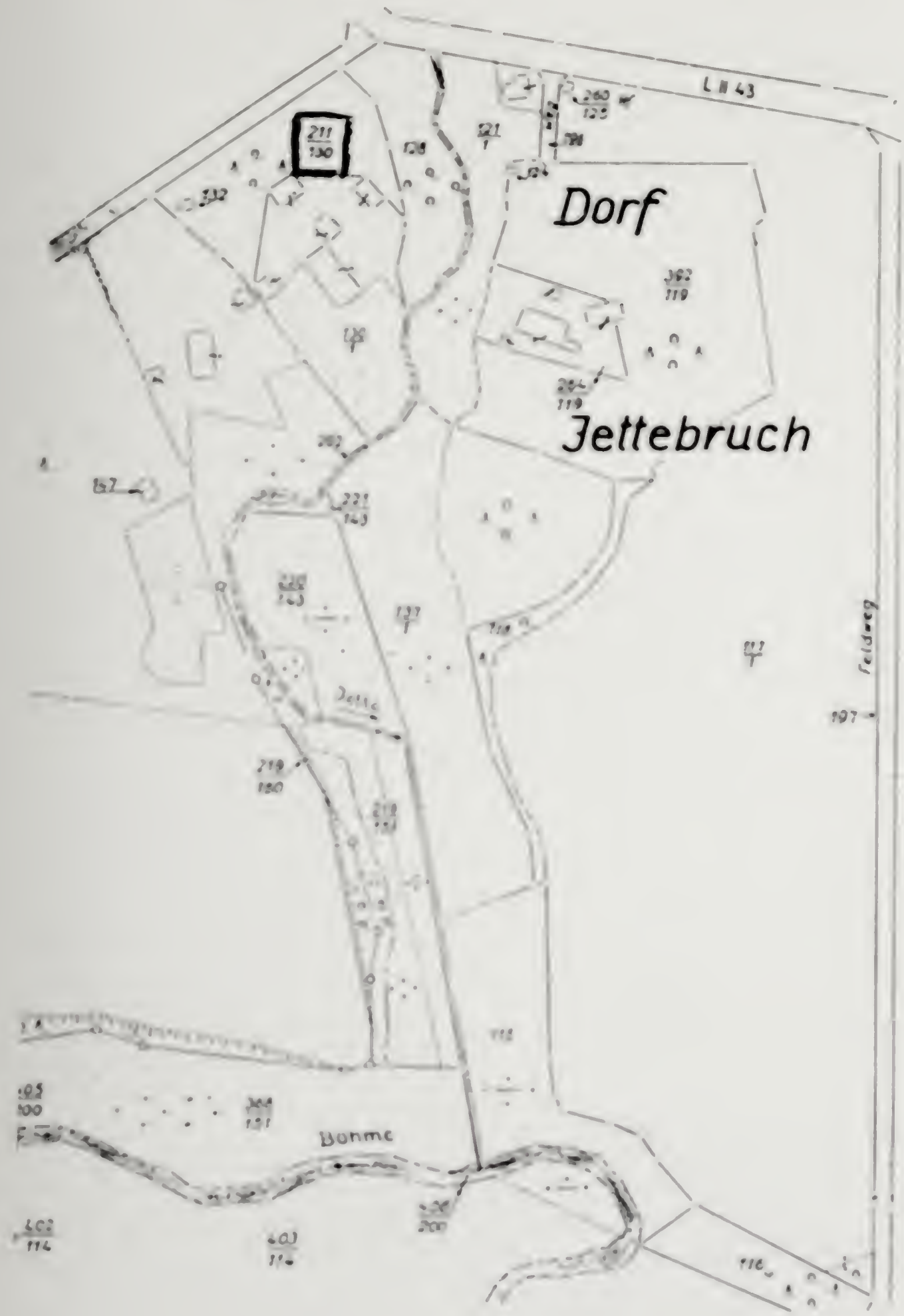

SURVEYORS CHART OF JETTEBROCK

ALTAR OF THE EVANG.-LUTH. CHURCH IN DORFMARK

CHRISTENING FONT OF THE EVANG.-LUTH. CHURCH IN DORFMARK

Now to the fit: It is just, that Johann Jacob Elling has married Annen Ilsen Hessen from Vierde. Ksp. Fallingbostel. She must be died quickly and he married Marie Engel Steinke (not Heinke!). I have sought zealous the death of Hessen 1772-1774 and the marriage with Steinke 1772 bis 1774, but vainly. Both must be issued outward. I shall tempt, to discover the deficient dates.

I add further 4 pages extracts. In the next days I send jou many other extracts, that is to say the mariages and deaths.

Sincerely

O. Hausbrand

Discount:		
State 11.XII		$1
15 certificates	DM 15,-	
Duties for Walsrode and		
Pastorate Dorfmark and		
Diacon True	" 8,50	
Kataster for cart	" 2,30	
2 Fotos	" 3,00	
Tickets to Dorfmark and back	" 15,00	
Inn	" 10,50	
Different postages	" 4 80	
Loss of time ca 40 hours	" 80,00	
	DM 139, 10	= ca 33
		Sa $ 34

It was through the efforts of Mr. Oscar Hausbrand that we were able to prove, among other things, that the Friedrich Elling of Monee, Illinois, was christened Johann Friedrich Peter Elling, born at Riepe, on Nov. 14, 1829. The Christoph Elling of Monee, Ill. was christened Georg Heinrich Christoph Elling, born at Mengebostel, on Oct. 15, 1821. These two men were brothers. Their parents were Heinrich Jacob Elling and Catharina Magdalene (Castens).

It was from this point that Mr. Hausbrand was able to search out the earlier ancestors. The earliest reference pertaining to the family name of Elling that Mr. Hausbrand came across was in the book, "Die Heidmark" by Hans Stuhlmacher of Fallingbostel.

Extract from Book Die Heidmark by Hans Stuhlmacher, 1935.
"S. 105 r Schon im Jahr 1363 findet man in Walsrode den Namen Coneke Allinges (= Elling)."

Also in this same book: "Anno 1438 bought their liberty: Henneke Ellinges in Jettebrocke, Beke his wife, Geseke, Herman, Hennecke, Aleke, Gheseke and Metteke, their children, and Tileke, his brother, Geseke, the wife of him, and Aleke, their daughter."

No effort was made to establish a connection between these two Ellinges families and our ancestors. Reliable records for the period prior to 1600 are not easy to come by.

At the time that I decided to write this story it was to be the story of Mr. Friedrich Elling and his direct line descendents. That is why he was given the number 1 and his generation was referred to as the first generation. I had no intention to trace back earlier ancestors in earlier generations. As it was originally written we had about 100 Ellings, all of whom lived in the United States, covering 5 generations, all in a rather near and easily understood package. Now we have 170 Ellings, covering 13 generations. That portion of the book that deals with the Ellings that lived in the United States was already written, and much of it was set up in type before I had any information on the German Ancestors. This explains why the German ancestors are numbered (G - 1), (G - 2), etc., and the German generations are numbered 1 through 8. In the German numbering system (G - 22) Johann Friedrich Peter 8 Elling is the same individual as Friedrich 1 Elling, (1). This is the only instance where we have an individual appearing in both numbering systems.

If no children are listed it does not necessarily mean that they did not have any children. It means that we did not run across any record of any children.

HanS 1 Elling, (G - 1) (Ancestors unknown), date of birth unknown, married about 1609, lived in Jettebrock.

Children:

G-2	Michael	2	b.	unknown	m
G-3	Karsten	2	b.	unknown	m.

Michael 2 Ellinges, (G - 2) (HanS 1), son of HanS Elling, date of birth unknown, name of wife and date of marriage unknown, lived in Jettebrock.

Children:

a	daughter	3	bapt. XXIV p. Trin 1657
G-4	HanS	3	bapt. 6.p.Ep 1660
G-5	Albert	3	bapt. 2.p.Ep 1662
	Wilhelm	3	bapt. 2.p.Ep 1665

Karsten 2 Ellings, (G - 3) (HanS 1), son of HanS Elling, date of birth unknown, name of wife and date of marriage unknown, lived in Brockeln.

Children:

Heinrich Kruse	3	bapt. 10.p. Trin. 1659
a daughter	3	bapt. unknown

HanS 3 Ellinges, (G - 4) (Michael 2, HanS 1), son of Michael Ellinges, was born on 6.p.Ep. 1660. Name of wife unknown, they lived in Jettebrock. HanS Ellinges was buried on 26 March 1739. His wife was buried on 31 Dec., 1732.

Children:

G-6	Michael	4	bapt. Quasim.	1688	m.	Catharina Carstens
	Magdalena	4	bapt. XII p.	1693	m.	Johann Henrich Kruse
	Dorothea	4	bapt. 5.p.Ep.	1702		
	Anna Gertrud	4	bapt. 14 Sund.	1704	m.	Jurgen Kroger
G-7	Wilhelm	4	bapt. sund. Sexag.	1706	m.	Maria Engel Ebeling

Albert 3 Ellinges, (G - 5) (Michael 2, HanS 1), son of Michael Ellinges was born on 2.p.Ep. 1662. The name of his wife unknown. They lived in Jettebrock. Albert Ellinges was buried on 13 Dec. 1720, age 59 years. His wife was born about 1669, was buried on 10 April, 1717, age 48 years.

Children:

Michael	4	bapt. 9.sund.p.Trin.	1703	bur. 21 May, 1724
HanS	4	bapt. Judica	1707	m. Ilse Maria Bargman

Footnote - HanS 3 Ellinges, (G - 4), was still using this spelling of his name when his son Wilhelm was born in 1706. Albert Ellinges (G - 5), used this form of the name when his son Michael was born in 1703. When his son HanS was born in 1707 Albert spelled his name Ellings. In all of the records subsequent to 1707, that I have seen, the name is either spelled Ellings or Elling.

MAP OF THE DORFMARK AREA

Michael 4 Ellings, (G - 6) (HanS 3, Michael 2, HanS 1), son of HanS Ellinges was born on Quasim, 1688. The name of Michael Ellings' first wife and the date of their marriage is unknown. She was buried on 26 Jan. 1721 at the age of 32. They lived in Jettebrock.

Children:

G-8	HanS	5	bapt. 20.p.Trin. 1714	m.	Maria Meyer
a	daughter	5	bapt. 12.p.Trin. 1716		
	Catharina Dorothea	5	bapt. 21.p.Trin. 1718	m.	Jacob Ripe Mackon on 23 July, 1758

Michael 4 Ellings, G - 6) (HanS 3. Michael 3, HanS 1), son of HanS Ellinges, (same as above). Michael Ellings' second wife was Catharina Carstens. The date of her birth is not known exactly; however she was born in March, 1696. The date of their marriage is unknown. They lived in Jettebrock. She was buried on 6 April, 1749, age 53 years less 8 days. Michael Ellings died on 29 Nov. 1758, age 70 years, 8 months.

Children:

Engel	5	bapt. 3.Adv. 1722	bur.	6 June, 1723
Cord	5	bapt. 3 Adv. 1724	m.	Anne Margarethe Furhop
Catharina Gertrud	5	bapt. Laet. 1727	bur.	23 Nov., 1732
Margaretha Marlene	5	bapt. XX p.Trin. 1732	m.	Hans Jacob Brameyer on 24 Oct., 1755
HanS Wilhelm	5	bapt. 11.p.Epiph. 1735		

Wilhelm 4 Ellings, (G - 7) (HanS 3, Michael 2, HanS 1), son of HanS Ellinges, was born (or bapt.) on sund. Sexg, 1706. Wilhelm Ellings married Maria Engel Ebeling on 25 Oct., 1736. They lived in Jettebrock. Wilhelm Ellings died on 4 April, 1767, age 61 years, 8 weeks, and 4 days. Maria Engel Ellings died on 19 April, 1772, age 59 years, 12 weeks.

Children:

Wilhelm	5	b. 18 Aug. 1737	d. 20 March 1757
Magdalene Dorothea	5	b. 19 Nov. 1742	bur. 2 March 1748
Cordt	5	. 6 Jan. 1749	d. 4 Jan. 1773
Thomas	5	b. 25 Oct. 1752	m. Anna Dorothea Tiemann Thomas died 20 Jan., 1829

HanS 5 Ellings, (G - 8) (Michael 4, HanS 3, Michael 2, HanS 1), son of Michael Ellings, was bapt. 20.p. Trin. 1714. HanS Ellings married Maria Meyer of Eintlingen on 14 Nov., 1743. They lived at Jettebruch. Maria Meyer was bapt. on 18 p. Trin, 1718. HanS Ellings died on 5 June, 1765, age 51 years, 19 weeks. On 18 (?) April, 1766 the widow Maria Meyer Ellings married Hans Jurgen Kroeger of Jettebruch. Sometime between 27 Aug., 1756 and 6 March, 1759, HanS Ellings changed the spelling of his name from HanS Ellings to Hans Elling.

Children:

	Hans Jacob	6	b. 1745	bur.	30 May 1746
		6	b. 3 Aug. 1747	bur.	22 Sept. 1752
	Heinrich Jacob	6	b. 2 May 1750	m.	Maria Engel Bemcke & Anne Elizabeth Steincke
G-9	Hans Jurgen				
		6	b. 2 May 1750	d.	1804
	Anna Engel	6	b. 22 Sept. 1752		
	Jacob	6	b. 2 Dec. 1754		
	Ilse Maria Margareta	6	b. 27 Aug. 1756		
	Catharine Marie	6	b. 6 March 1759		
	Margrete Marlene	6	b. 11 June 1764	d.	23 Jan., 1773
	Georg Friedrich Wilhelm	6	b.	m.	Anna Ilse HeSen
G-10	Johann Jacob			m.	Anna Maria Penzhorn

HanS Jurgen 6 Ellings, (G - 9) (HanS 5, Michael 4, HanS 3, Michael 2, HanS 1), son of HanS Ellings was born on 2 May, 1750, twin brother of Anna Engel. Hans Jurgen Ellings married Maria Engel Bemcke. They lived in Jettebruch.

Children:

Cathrine Magdalene	7	b. 4 Oct. 1772	m.	Hans Heinrich Meyer on 12 Oct., 1801

Hans Jurgen 6 Ellings, (G - 9), same as above. After the death of his wife, the date of which is unknown, Hans Jurgen Ellings remarried. The name of his second wife, Anne Elizabeth Steincke, the date of the second marriage is unknown. They lived in Jettebruch. Marie Engel died on 9 Aug. 1804, age 61 years, 4 months, 5 days. Hans Jurgen Ellings died on 24 March, 1813, age 62 years, 10 months, 21 days.

Children:

G-11	Hans Wilhelm	7	b. 13 April	1774	m.	Anna Ilse Oelfken
G-12	Johann Heinrich	7	b. XX.p.Trin.	1776	m.	Catharine Marie Meier
	Thomas	7	b. 6 Oct.	1779		
G-13	Heinrich Jacob	7	b. 13 Nov.	1781	m.	Catharina Magdalene Castens.
	Margreta Ilse	7	b. 18 Jan.	1784		
	Cathrine Elizabeth	7	b. 14 Oct.	1788		

Johann Jacob 6 Ellings, (G - 10) (HanS 5, Michael 4, HanS 3, Michael 2, HanS 1), son of HanS Ellings was born Johann Jacob Ellings, married Anna Ilse HeSen of Vierde Fallingbostel on 23 Oct., 1772. They lived in Jettebruch. Anna Ilse died on 6 Jan., 1784, age 40 years.

Children:

Anne Margrethe	7	b. 11 Dec. 1773	d.	27 Dec. 1773

Johann Jacob 6 Ellings, (G - 10) (same as above). After the death of his first wife on 6 Jan., 1784, Johann Jacob Ellings married Anna Marie Penzhorn of Ohmen Soltau on 4 Feb., 1785. They lived in Jettebruch. Anna Maria Elling died on 28 April, 1821, age 66 years, 11 months, 27 days.

Children:

Hans Wilhelm 7 Elling, (G - 11) (Hans Jurgen 6, HanS 5, Michael 4, HanS 3, Michael 2, HanS 1), son of Hans Jurgen Ellings was born on 13 April, 1774. Hans Wilhelm Elling married Anna Ilse Oelfken on 28 Nov. 1799. She was the daughter of Peter Oelfken of Jettebruch. They lived in Jettebruch. Hans Wilhelm Elling died in 1858.

Children:

G-14	Johann Wilhelm	8	b. 19 Jan.	1801	m.	Anne Dorothea Mencke
G-15	Henrich Jacob	8	b. 27 Sept.	1807	m.	
G-16	Henrich Christoph	8	b. 4 Feb.	1812	m.	Marie Engel Wischot
G-17	Catharina Engel	8	b. 12 May	1817		
G-18	Henrich Friedrich	8	b. 23 Jan.	1821	m.	Catharina Penzhorn
					m.	Catharina Marie Dittmer

Johann Heinrich 7 Elling, (G - 12) (Hans Jurgen 6, HanS 5, Michael 4, HanS 3, Michael 2, HanS 1), son of Hans Jurgen Ellings, was born XX p. Trin. 1776. Johann Heinrich Elling married Catharine Marie Meier on . They lived at Fallingbostel.

Children:

Casten Heinrich Conrad 8 b. 27 Jan. 1822

Heinrich Jacob 7 Elling, (G - 13) (Hans Jurgen 6, HanS 5, Michael 4, HanS 3, Michael 2, HanS 1), son of Hans Jurgen Ellings, was born on 13 Nov. 1781. Heinrich Jacob Elling married Catharina Magdalene Castens on 22 May, 1814. Catharina Magdalene Castens was born on 23 Feb., 1790. They lived in Riepe. He was a farmer. Heinrich Jacob Elling died in April, 1842.

Children:

G-19	Heinrich Friedrich	8	b.	4	Jan.	1815	
G-20	Georg Heinrich Christoph	8	b.	15	Oct.	1821	came to America
G-21	Johann Peter	8	b.	2	Aug.	1825	
G-22	Johann Friedrich Peter	8	b.	14	Nov.	1829	came to America
G-23	Heinrich Jacob Christoph	8	b.	19	Feb.	1835	

Johann Wilhelm 8 Elling, (G - 14) (Hans Wilhelm 7, Hans Jurgen 6, HanS 5, Michael 4, HanS 3, Michael 2, HanS 1), son of Hans Wilhelm Elling was born on 19 Jan. 1801. Johann Wilhelm Elling married Anne Dorothea Mencke on 30 Nov., 1827. They lived at Jettebruch.

Children:

G-24	Catharina Marie	9	b.	7	Nov.	1828
G-25	Hans Hinrich Wilhelm	9	b.	5	July	1831
G-26	Dorothea Magdalene	9	b.	24	Sept.	1834

Henrich Friedrich 8 Elling, (G - 18) (Hans Wilhelm 7, Hans Jurgen 6, HanS 5, Michael 4, HanS 3, Michael 2, HanS 1), son of Hans Wilhelm Elling and Anna Ilse, born Oelfken. Heinrich Friedrich Elling was born in Jettebruch, on 23 Jan., 1821. The name of his first wife, Catharina Penzhorn, the date of their marriage is not known.

Children:

G-27 Heinrich Christoph 9 b. 12 Aug. 1850 m. Marie Christine Luise Kruse

Heinrich Friedrich 8 Elling, (G-18) (same as above), son of Hans Wilhelm Elling, and Anna Ilse, born Oelfken. On 31 July, 1857, Henrich Friedrich Elling married Catharina Marie Dittmer of Nindorf. Catharina Marie Dittmer was born on 21 Feb. 1838. She was the daughter of Wilhelm Dittmer and Dorothea, born Kohlenberg. They lived in Dorfmark.

Children:

Hans Hinrich Wilhelm 9 Elling, (G - 25) (Johann Wilhelm 8, Hans Wilhelm 7, Hans Jurgen 6, HanS 5, Michael 4, HanS 3, Michael 2, HanS 1) son of Johann Wilhelm Elling, was born on 5 July, 1831. Hans Hinrich Wilhelm Elling married Anne Marie Hebenbrock on 15 June, 1856. Anne Marie Hebenbrock was the daughter of Heinrich Peter and Anna Marie Hebenbrock. She was born on 31 Jan., 1836.

Children:

Heinrich Christoph 9 Elling, (G - 27) (Heinrich Friedrich 8, Hans Wilhelm 7, Hans Jurgen 6, HanS 5, Michael 4, HanS 3, Miachel 2, HanS 1), son of Henrich Friedrich and Catharina born, Penzhorn. Heinrich Christoph Elling was born 12 Aug., 1850 in Dorfmark. On 1 April, 1872, Heinrich Christoph Elling, married Marie Christine Luise Kruse of Brock. She was born on 6 July, 1825, her parents, Johann Henrich Kruse and Elisabeth, maiden name, Glan. Heinrich Christoph Elling and his wife lived in Jettebruch.

Children:

Referring back the personnel correspondence we can now see that the great-grandfather of Karl-Heinz Elling, Mr. Heinrich Friedrich Elling, born Jan. 23, 1821, corresponds to Henrich Friedrich 8 Elling, (G - 18).

The Georg Heinrich Christoph Elling, born Oct. 15, 1821, that the Deacon Friedrich True found in his records is the same individual as the Georg Heinrich Christoph 8 Elling, (G - 20).

In the case of Mr. Adolf Elling, Salt Lake City, Uath, his grandfather, Peter Johann Elling, born Aug. ____, 1825, at Riepe, Dorfmark, is undoubtedly the Johann Peter 8 Elling, (G - 21), brother of the Georg Heinrich Christoph 8 Elling, (G - 20) and Johann Friedrich Peter 8 Elling, (G-22), who came to Monee, Illinois. The direct line ancestors of Mr. Adolf Elling all lived in Germany. He was born in Germany but sometime during the period of 1930 to 1959, Mr. Adolf Elling came to America.

THE BOSTELMANN, CASTEN and FURHOP Lines

The ancestors of Anna Maria Bostelmann, wife of Hinrich Castens; of Catharina Magdalene Castens, wife of Heinrich Jacob Elling; and also of Catharina Elisabeth Furhop, wife of Jurgen Henrich Christoph Bostelmann.

THE ANCESTORS OF ANNA MARIA BOSTELMANN

N. Bostelmann (G - 28), ancestors unknown, date of birth unknown, date of his death unknown. N. Bostelmann married Anna Badenhops of Jdsen. They lived in Kettenburg. Date of her birth unknown. She died 16 June 1682.

"Extract out of the deathbook the evang. luth. Parochie Walsrode. Year 1682.

On 17 June

The Old Bostelmansche from Kettenburg named Anna Badenhops. who evening before at 9 o'clock died, buried, her age 81 years.

For the correctness:
Walsrode, the 12 December 1959
(Signed)
Kirchenbuchfuhrer"

Children:

G-29	Johann	b.	1630	m. 1st.	Elisabeth Norden
				m. 2nd	Margarete Cours

Johann Bostelmann (G - 29) (N. Bostelmann), son of N. Bostelmann, was born in the year 1630. Johann Bostelmann married Elisabeth Norden of Jedding in 1662. They lived in Kettenburg. The date of her birth is not known. She died 8 Oct. 1689,

"Extract out of the deathbook the evang. luth. Parochie Walsrode. Year 1689.

on 9 October

Johan Bostelman of Kettenburg his wife Elisabeth Norden of Jedding who for 14 days was ill with dysentry, and on 8 October in the morning died, buried, her age 47 years, married 27 years, 8 children namely, 4 sons and 4 daughters of whom 2 sons before her died."

For the correctness:
Walsrode, the 12 December 1959
(Signed)
Kirchenbuchfuhrer

Children:

G-30	Johann	b.	m. Margarethe Anna Cours

Johann Bostelmann (G - 29) (N. Bostelmann), same as above. After the death of his first wife in 1689, Johann Bostelmann married on 30 Oct. 1690, Margarete Cours of Wahnsen. Date of her birth and death, unknown. Johan Bostelmann died at Kettenburg on 3 April, 1711.

"Extract out of the deathbook the evang. luth. Parochie Walsrode. Year 1711.

On 25 April

Johann Bostelmann of Kettenburg buried. Is born Anno 1630 of N. Bostelman annd Anna Badenhops of Jdsen. Anno 1662, when he was 32 years old he had married Elisabeth Norden of Jedding, with her he was married 27 years and begotten four sons and four daughters, of whom two son and one daughter are already died. His wife died on 8 Oct. 1689 of the red diarrohoea. He was a widower one year and three weeks.

He had on 30 Oct. 1690 again married Margarete Cours of WahnSen, with her he has lived congeneally 21 years and has begotten 1 son and one daughter. A growth has developed on his face under the right eye, which was cut open and which made him suffer a long time.

He is at last died old and weary of life on 23 April 1711, about midday. Age 81 years. Sermon Hiob 19 25, 26, 27".

For the correctness:

Walsrode, the 12 December 1959

(Signed)

Kirchenbuchfuhrer

Johann Bostelmann (G - 30) (Johann Bostelmann, N. Bostelmann) son of Johann Bostelmann, date of birth unknown. Johann Bostelmann married Margarethe Anna Cours at Walsrode on 21 Nov. 1695. Margarethe Anna Cours was born in 1676 in Huthagen. They lived at Kettenburg. Johann Bostelmann died on 27 April, 1717, age 53 years.. Margarethe Anna Cours was the daughter of Hermann and Margarethe Cours. She died 28 Jan. 1719.

"Extract out of the deathbook the evang. luth. Parochie Walsrode. Year 1719 Nr. 12.

On 30 Jan.

Margarethe Anna Bostelmann of Kettenburg buried, born Hutthofe 1676 to Hermann Coers and Margarethe Coers. Married with Johann Bostelmann of Kettenburg on 21 Nov. 1695, five children, three sons and two daughters, of whom two sons and one daughter now live. Her husband died on 27, April 1717. She had many mother difficulties and other illnesses. After being in bed the past several weeks she died in her sleep, sometime after midnight on 28 Jan.

Age 42 years. Text sermon ex. Ps. 4 V 9."

For the correctness:

Walsrode, the 12 December 1959

(Signed)

Kirchenbuchfuhrer

Children:

G-31 Jurgen Heinrich Christoph b. 24 April 1699 m. Catharina Elisabeth Furhops

Jurgen Heinrich Christoph Bostelmann (G-31) (Johann Bostelmann, Johann Bostelmann, N. Bostelmann), son of Johann Bostelmann, was born on 24 April, 1699 at Kettenburg. Jurgen Heinrich Christoph Bostelmann married Catharina Elisabeth Furhop (G - 39) at Walsrode on 26 Oct. 1719. Catharina Elisabeth Furhop was born 1 July 1698 ? at Sieverdingen. She was the daughter of Hans Henrich Furhop.

Children:

G-32 Anna Maria b. 19 April 1737 m. Hinrich Castens G-33

THE ANCESTORS OF CATHARINA MAGDALENA CASTENS

Hinrich Castens (G - 33), son of Hinrich Castens, lived in Frielingen. The date of his birth is unknown. Hinrich Castens married Anna Maria Bostelmann (G-32) of Kettenburg on XXIII post. Trin. 1756. Anna Maria Bostelmann was born on 19 April 1737. Hinrich Castens died on 20 March 1773, age 74.

Children:

	Maria Elizabeth	b.		1758		
G-34	Hinrich	b.	13 March	1760	m.	Catharina Margretha Cohrs
	Hans Friedrich	b.	26 Aug.	1763		
	Jacob Christoph	b.	30 March	1766		

Hinrich Castens (G - 34), son of Hinrich Castens, lived in Frielingen. He was born on 13 March 1760. Hinrich Castens married Catharina Margretha Cohrs on 26 Oct. 1787.

Children:

G-35	Catharina Magdalene	b.	23 Feb	1790	m.	Heinrich Jacob Elling (G-13)

THE ANCESTORS OF CATHARINA ELISABETH FURHOP

Hans Furhop (G - 36), ancestors unknown, date of birth unknown, date of death unknown, Married Anna Tietken.

Children:

G-37 Albert Furhop b. 2 Feb. 1641 m. Catharina Hogrefe

Albert Furhop (G-37) (Hans Furhop), son of Hans Furhop. was born on 2 Feb. 1641 at Sievern. Albert Furhop married Catharina Hogrefe in the year 1665. Albert Furhop died on 27 Oct. 1717. Catharina Hogrefe Furhop was born in 1640, died on 3 July 1713.

Children: Two sons and four daughters.

G-38 Hans Henrich b. 11 Nov. 1671 m. Mette Norden

Hans Henrich Furhop (G - 38) (Albert Furhop, Hans Furhop), son of Albert Furhop was born on 11 Nov. 1671, at Sieverdingen. Hans Henrich Furhop married Mette Norden of Tadeln on 5 Nov. 1695. Mette Norden, daughter of Henrich Norden was buried on 15 May 1753. Hans Henrich Furhop died on 9 April 1730.

Children: Two sons and one daughter.

G-39. Catharina Elisabeth b. 1 July 1698 m. Jurgen Henrich Christoph Bostelmann G-31

Listed below are some of the German records that were consulted and translated in getting together the information on our German ancestors. For the benefit of those people that might be interested in seeing them, I have the lists of baptisms, marriages and burials of all Ellings, related and unrelated, who lived in this area during this period. I also have certified copies of all of the direct line Ellings.

From the records of The Evang. Luth. Church in Dorfmark.

A listing of the baptisms of all persons named Elling who lived in Jettebruch during the period of 1657 to 1836.

A listing of the marriages of all persons named Elling who lived in Jettebruch during the period of 1729 to 1856.

A listing of the burials of all persons named Elling who lived in Jettebruch during the period of 1712 to 1818.

The parochial registers of The Evang. Luth. Church in Fallingbostel.

The parochial registers of The Evang. Luth. Church in Walsrode.

Copies of baptismal certificates issued by The Evang. Luth. Church in Dorfmark.

Die Heidmark by Mr. Hans Stuhlmacher, 1935.

The parochial registers of Visselhovede from 1715 to 1726, depository Stattsarchiv Hannover, under the signature: Hann. Br. Arch. Des. 83.

Various church and state records in the Staatsarchiv, Hannover.

GERMAN ANCESTORS

ADDITIONAL NOTES

CHAPTER II

THE FIRST GENERATION

Frederick 1 Elling, (1), is the same individual as G - 22. Johann Friedrich Peter 8 Elling. Friedrich Elling was born in Riepe, Dorfmark, Hannover Province, Germany, on Nov. 14, 1829; died in Cashion, Oklahoma on Sept. 3, 1912, buried at Cashion, Oklahoma. Friedrich Elling married on Jan. 5, 1857 at Monee, Illinois, Johanna Baker. It is indicated in a number of places that Johanna and her brothers and sisters were born in or near Sulbeck, Einbeck County, Hannover Province, Germany. Johanna Baker was born on Sept. 13, 1837; died in Cashion, Oklahoma on Sept. 23, 1919, buried at Cashion, Oklahoma.

The name of Baker, at least in the nineteenth century, was unknown in Germany. Before coming to this country, Johanna and all of her brothers and sisters used the name of Bocker. Even as late as 1881, Mr. and Mrs Elling wrote their names - Friedrick Elling and Johanna Bocker Elling, (note d). Johanna Baker was about thirteen years old when both of her parents were killed by an epidemic of Cholera. Johanna had eight brothers and sisters, the names of seven of them, not necessarily in order of age - Christoph, William, George, Louise, Georgiana, Henry and August. Henry Baker was in America at the time of his parents death. He went back to Germany and brought his brothers and sisters over to America. This would have been approximately 1856. The Bakers also came to Monee, Illinois. They must have stayed in Monee for a few years, the 1860 census records indicate that August Baker was a farmer in the vicinity of Monee, and it is believed that George Baker and Louise Baker spent most of their lives in or near Monee. William Baker was a harness maker and spent most of his life in Champaign, Illinois. Sometime after 1860, Christoph and Georgiana Baker came out to Leavenworth and Wyandotte Counties in Kansas. August Baker served in the Civil War and did not settle in Wyandotte County until about 1870.

For a period of approximately two years, when he was about 18 years old, Mr. Frederick Elling worked on a ship going between Germany and the United States. In the year of approximately 1854 he and his brother Christoph came to the United States to stay. It woud be reasonable to suppose that Frederick and Christoph Elling came to the United States at the same time. Perhaps this information can be searched out at some later date. They undoubtedly took passage out of Bremen and arrived at New York City. Libraries quite often have passenger lists of ships that carried early settlers to America. It would be interesting to know the name of the ship, date of arrival, etc.

Mr. Christoph Elling and Katharina Franzen were married in Monee, date of marriage unknown. Katharina Franzen was from the village of Erfde in the German Province of Schleswig-Holstein. She was born in 1836. Christoph Elling and his family lived in Monee, Ill. until about 1874, when they moved to Chicago. Christoph Elling, like his brother Frederick, was a carpenter.

note d - Baptismal Certificate of Carl George 2 Elling, (11).

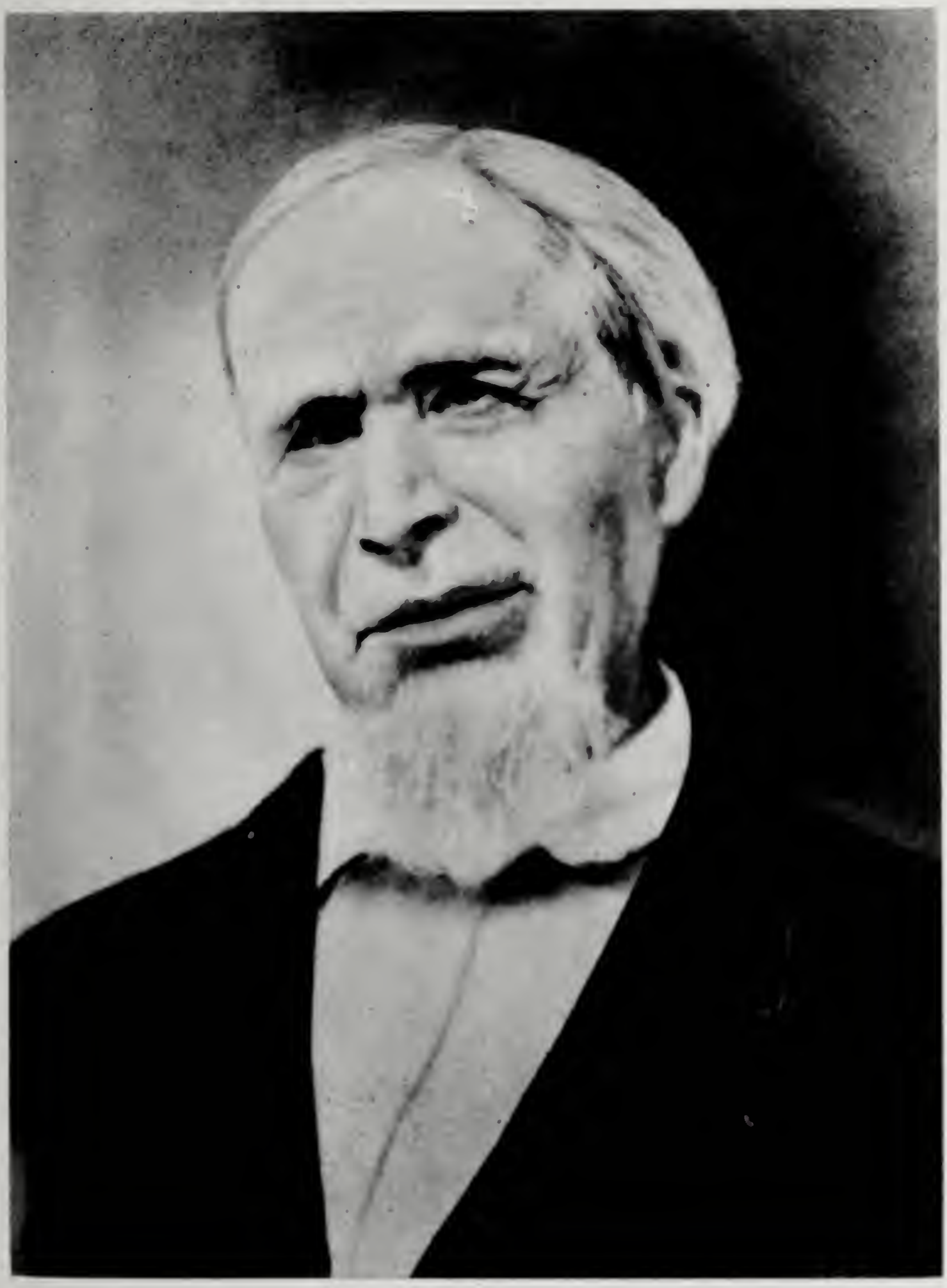

MR. FREDERICK ELLING

MRS. JOHANNA BAKER ELLING

THE FIRST GENERATION

Frederick and Johanna Elling had twelve children:

	a August					
2.	b Louisa	2	b.	Jan. 5, 1861	f.n.	Louisa Friederike Katharina
					m.	Philip Klamm
3.	c George	2	b.	Dec. 5, 1862	f.n.	George F.
					m.	Anna Sills
4.	d Bernard	2	b.	Dec. 6, 1864	f.n.	Bernard Paul
					m.	Amelia Bernhart
5.	e Ricka	2	b.	Oct. 14, 1866	f.n.	Maria Margaretha Dorothea Heinrike
					m.	John Ulrich Fisher
6.	f Anna	2	b.	Oct. 19, 1868	f.n.	Johanna Christine Georgine
					m.	Albert Lee Wright
7.	g Minnie	2	b.	Nov. 26, 1870	f.n.	Emilie Minna Margarethe
					m.	
8.	h Edward	2	b.	May 8, 1873	f.n.	Edward Jerry
					m.	Rose Abeline Shelton Bates
9.	i Otto	2	b.	Sept. 2, 1877	f.n.	Otto Heinrich August
					m.	Helen Mae Pool
10.	j Albert	2	b.	Nov. 24, 1878	f.n.	August Heinrich Albert
					m.	Cora Ellen Way
11.	k Carl	2	b.	Feb. 23, 1881	f.n.	Georg Jacob Karl
					m.	Mary Mudge
					m.	Francis Shaw Jameson
12.	l Freda	2	b.	1885	d.	1888

Children of Christoph and Katharina Elling

a.	George Frederick Heinrich	b. Aug. 30, 1858	d. June 16, 1860
b.	Anna Johanna	b. May 23, 1860	
c.	Wilhelm Frederick Christian	b. Sept. 29, 1861	
d.	Magdalena Margaretha Christine Maria	b. Dec. 5, 1866	
e.	Johanna Louise Georgine	b. Jan. 6, 1869	
f.	Johanna August	b. Dec. 16, 1870	
g.	Christoph George Friedrich	b. Aug. 24, 1877	

This is all the information that I have on the Christoph Elling Family. Christoph Elling passed away on April 5, 1877. The records of W. W. Fern and Sons, Undertakers, Chicago, reveal that Katharina Elling married a second time. The name of her second husband was Schmidt. Hannover, Germany is again mentioned in the records of W. W. Fern and Sons as being the birthplace of Mr. Christoph Elling, but they do not indicate whether they are referring to the town or the providence. Katharina Elling Schmidt passed away in 1919. Mr. Christoph Elling and his wife, Katharina, are buried in the St. Paul's Cemetery, Monee, Illinois. Mrs. Olive Elling, the widow of Christoph George Friedrich Elling is living in Chicago at 8709 South Morgan Street.

It would have been late summer or the fall of 1882 that the Frederick Elling Family came to Kansas. The original purchase of land near Valley Falls, Kansas, consisted of 160 acres that Frederick bought from John Fisher for twelve hundred dollars. It had no buildings or improvements on it and the Ellings lived with the Fishers until their household effects arrived from Monee. John Fisher and his wife Elizabeth had five children In the year of 1882 the ages of the children would have been approximately as follows: Joseph 21, John 19, Louis 17, Ellen 13, and Martha 7. We will have occasion to refer to the Fisher Family later on; however, I should mention at this time that Martha, better known as "Mattie" married a Mr. Hilty. Mrs. Mattie Hilty is living at 913 Frazer Street, Valley Falls, Kansas. I am indebted to her for her assistance in getting some of this information together.

The farm was located about one and a half miles north of North Cedar, which is, or was, about five miles west of Valley Falls. There is not much left of North Cedar now, the railroad freight depot has been torn down. Sometime later Mr. Frederick Elling bought an additional 120 acres just across the road to the south from the original 160 acres.

Frederick had built and operated a gristmill in Monee. When they moved to Kansas this gristmill was dismantled and shipped out to Valley Falls. The mill as originally designed had twelve metal "stompers", which operated somewhat in the fashion of pistons hanging down from a crankshaft but without cylinder walls. There were I believe three crankshafts with four "stompers" hanging from each one. This arrangement apparently was not satisfactory and two grinding stones were obtained to replace the "stompers". The original design also had a small windmill mounted on the top. This small windmill was designed and geared in such a fashion as to turn the large windmill into the wind. This arrangement was used in both Monee and Valley Falls, but was later replaced with a large "tail-fin", twelve feet long and three and one-half feet wide. This tail and also the large "Dutch windmill" type blades that provided the power for the mill were made out of Blue Poplar.

The six blades of the "windmill" extended out twelve and one-half feet from the shaft The inner four feet of each blade was mounted in a fixed position; however, the outer six feet could be feathered to reduce the "bite" in case the wind was too strong. The shaft leading from the "windmill" was geared to a vertical shaft, 35 feet long, this was geared to a five foot horizontal shaft which in turn was geared to a four foot vertical shaft. On this four foot shaft was mounted a wooden pulley, five feet in diameter and seven inches thick. This large pulley rotated in a horizontal plane, and drove by means of a six inch leather belt, a smaller wooden pulley, likewise mounted in a horizontal plane. The distance between these two pulleys was sixteen feet, center to center. The vertical shaft of the small pulley transmitted the power to the upper grinding stone. This upper stone must have weighed approximately five hundred pounds. The bottom stationary stone weighed approximately eight hundred pounds. There was some sort of an arrangement which permitted the upper stone to be raised and lowered thereby changing the granulation of the feed that was being ground, also the upper stone, by means of a windlass, could be lifted out of position and to one side so that both it and the bottom stone could be redressed. Solid steel shafting, two inches in diameter, was used to carry the power from the "windmill" to the grinding stones. Altogether there was fifty feet of this shafting. The mill was also equiped with two large magnetic separators which prevented any scraps of metal from getting in between the grinding stones. Frederick Elling ground the feed for five cents a bag.

In 1902, sometime in the early part of the year, Frederick and Johanna Elling moved to Cashion, Oklahoma. They had a small house in the northern part of Cashion and also five acres of land just outside of Cashion.

Obituary of Frederick Elling (note e)

note e - Sept. 13, 1912 issue of Farmer's Vindicator, weekly newspaper published in Valley Falls, Kansas.

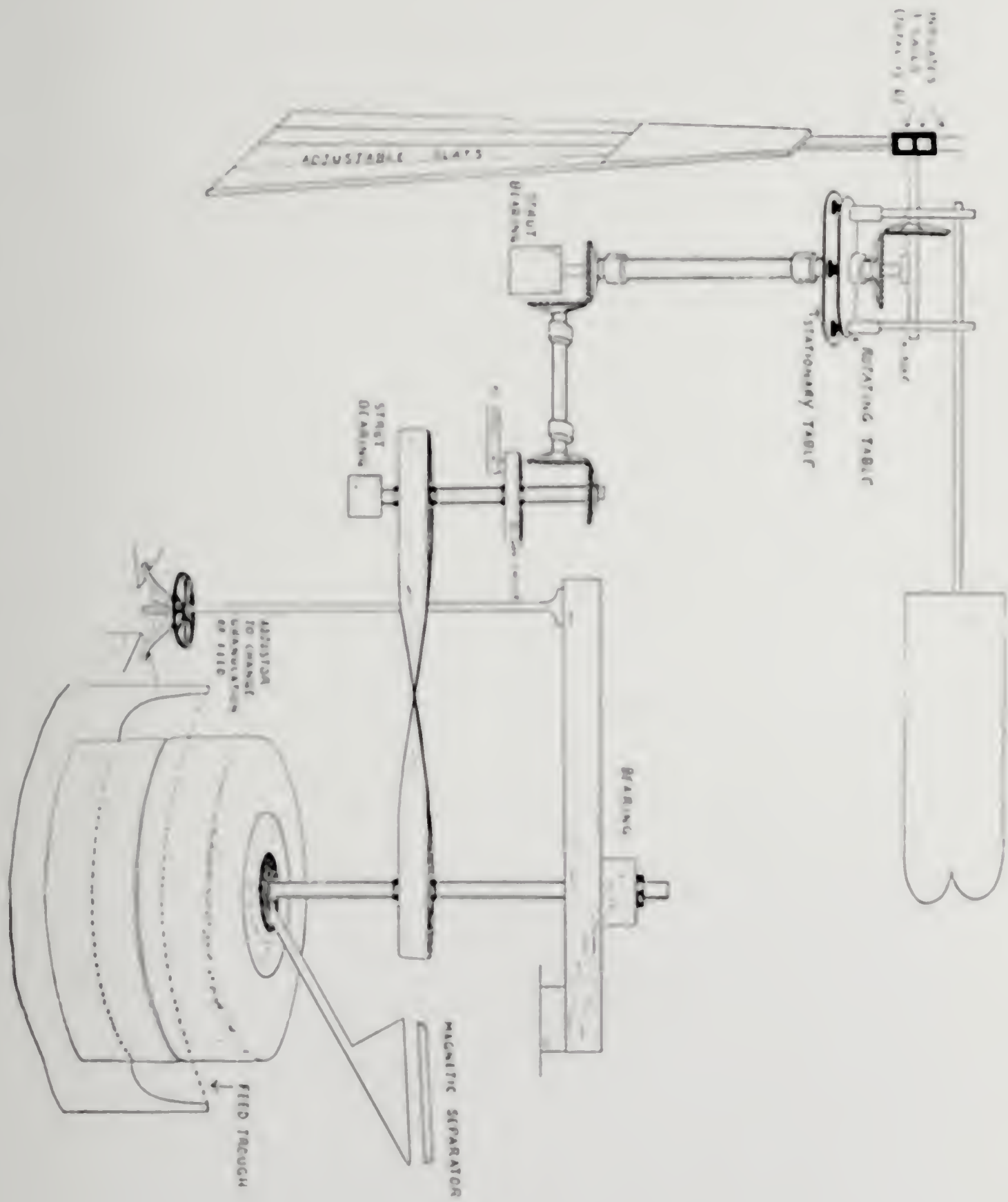

SCHEMATIC DIAGRAM OF THE GRISTMILL

KANSAS STATE HISTORICAL SOCIETY
Nyle H. Miller, Secretary
TOPEKA, KANSAS

STATE OF KANSAS, COUNTY OF SHAWNEE, SS

Mary Lou Houdyshell, of lawful age, being first duly sworn, on oath says, that she is employed in the Newspaper division of the Kansas State Historical Society. Volumes of the Farmer's Vindicator, a weekly newspaper published in Valley Falls, Jefferson county, Kansas, form a part of the newspaper collection preserved by the Society.

Affiant further say that upon examination of such files that the following notice appeared in the issue of Friday, September 13, 1912.

OBITUARY OF FREDERICK ELLING

Frederick Elling was born at Bremen, Germany, October 14, 1829, and died at Cashion, Okla., Sept. 3, 1912, age 82 years, 10 months, 19 days. Mr. Elling came to the United States in 1854, and lived in Illinois twenty-six years. Was married to Miss Johanna Baker January 5, 1857. To this union was born twelve children, of which three preceded him to the great beyond. In the year 1881 he and famiy moved to Kansas, where they lived near North Cedar twenty-two years, moving to Cashion, Okla., nine years ago, where he lived until his death. His wife, Mrs. Johanna Elling, and children, Mrs. Ricka Fisher, Mrs. Lee Wright, of Cashion; Minnie Elling, of Topeka, Kansas; Geo. F. Elling, of Valley Falls, Kansas; Bernard Elling, of Cashion, Okla.; Edward Elling, of Kansas City, Kansas; Otto H. Elling, of Lawton, Okla.; Albert Elling, of Bashor, Kansas; Carl Elling, of Nowata, Okla.; and Mr. and Mrs. Will Steinbeck, of Leavenworth, Kansas, were all present at the funeral to bid farewell to the remains of a kind and loving father.

Mr. Elling joined the Lutheran church at the age of 29 and has been a faithful member ever since.

The promise: "Thou shalt come to thy grave in a full age, like as a shock of corn cometh in his season," the last and best promise made to Job., has been fulfilled to Mr. Elling. He was ripe for the harvest. May God care for the departed spirit and comfort the bereaved.

The departed was laid to rest in the Cashion cemetery Wednesday afternoon, Rev. Williamson having charge of the services. - The Cashion (Oklahoma) Independent.

And further affiant says not.

Mary Lou Houdyshell

Subscribed and sworn to before me this 29day of November, 1958.

F. R. Blackburn
notary public

(My commission expires March 18, 1961).

JOHANNA BAKER

Was born at Sulbeck, Germany, September 13, 1837, and came to the United States at 19 years of age with five brothers and three sisters.

On January 5th, 1857, she was married to Frederick Elling who passed away September 3, 1912. In 1902 they came to Oklahoma where she made her home until her death, Sept. 23, 1919.

Her children who survived her are: Mrs. Ricka Fisher; Mrs. Lee Wright, and Bernard Elling, of Cashion; Mr. Ed J. Elling of Kansas City, Kans.; Miss Minnie Elling of Topeka, Kansas; Otto H. Elling, of Lawton, Okla.; Albert H. Elling, Basehor, Kansas; and Carl Elling of Manhattan, Kans.

All the children except Albert were present at the funeral.

She was a member of the German Lutheran Church.

THE ELLING FAMILIES

ADDITIONAL NOTES

THE FIRST GENERATION

ADDITIONAL NOTES

THE FIRST GENERATION

ADDITIONAL NOTES

CHAPTER III

THE SECOND GENERATION

Louisa 2 Elling, (2) (Frederick 1), daughter of Frederick and Johanna (Baker) Elling, was born in Monee, Illinois on Jan. 5, 1861; died in Leavenworth, Kansas on Nov. 9, 1907, buried in Leavenworth, Kansas. Louisa Elling married on Oct. 14, 1884 (?), probably at Denison, Kans., Philip Klamm. His parentage is unknown. Philip Klamm was born in Germany, in 1859; died Oct. 26, 1923 at Leavenworth, Kansas, buried in Leavenworth, Kansas.

Philip and Louise Klamm lived in Leavenworth, Kansas. Philip Klamm was a meat broker. He would buy from the packing house his assortment of meats which consisted of items such as liver sausage, smoked sausage, salimi, smoked herring and cold sliced ham . His stock would be loaded on to a horse drawn delivery wagon and he would take off. He sold primarily to restaurants and saloons. He undoubtedly had many opportunities for a sociable glass of beet or a shot of whiskey. But he also had a route to cover each day. He was his own boss. He did not let the social aspects of the situation interefere with the business at hand.

Children:

12.	a Otto Elling	3	b.	Dec. 17, 1885	m.	Clara Poggemeyer	
	b Freddie	3	b.	1888	d.		1889
	c Louis	3	b.	1890	d.		1890
13.	d Minnie Elizabeth	3	b.	May 9, 1891	m.	William F. Steinbeck	
					m.	J. E. Blacet	
	e Margaret Emile	3	b.	1893	d.		1898

George F. 2 Elling, (3), (Frederick 1), son of Frederick and Johanna (Baker) Elling was born in Monee, Illinois on Dec. 5, 1862; died at Valley Falls, Kansas on Nov. 11, 1917, buried at Valley Falls, Kansas. George F. Elling married on Nov. 13, 1889, at North Cedar, Kansas, Anna Sills. Anna Sills was born in 1869, died 1949, buried at Valley Falls, Kansas.

The following article appeared in the Nov. 16, 1917 issue of the Farmer's Vindicator, a weekly newspaper published in Valley Falls, Kansas.

DEATH OF GEORGE ELLING

"After a short illness, George Elling died at his home in Valley Falls Sunday morning, surrounded by his wife and near relatives. Wednesday two weeks ago, he returned home from the Eldorado Oil fields where he had been working with Johnny Dodge, not feeling well. "tired and sleepy," he said.

He grew worse and a physician was called. The patient was found to be suffering with a severe attack of typhoid. While is was generally known that he was seriously ill his death brought a shock to the community.

George F. Elling was born at Monee, Illinois, December 5, 1862, and died at Valley Falls, Kansas, Nov. 11, 1917, aged 54 years, 11 months

and 6 days. With his parents George moved to Valley Falls, Kansas, in 1882. They located on a farm a few miles north of North Cedar. He was married to Anna Sills, at North Cedar on November 13, 1889. To this union was born one daughter, who died in infancy. Only six years ago they moved to the city of Valley Falls where he was engaged in the lumber and implement business for awhile.

He is survived by his aged mother at Cashion, Okla., where several members of the family located after the death of the father, and five brothers and three sisters, Bernard Elling, Mrs. Ricka Fisher and Mrs. Anna Wright of Cashion, Okla., Minnie Elling of Topeka, Ed J. Elling of Kansas City, Kansas, Otto H. Elling of Lawton, Okla., Albert H. Elling of Basehor and Carl G. Elling of Parsons, Kansas.

His father and one brother, August, and two sisters, Mrs. Louisa Klamm and Freda Elling, preceded him in death.

He was a member of the Lutheran Church and an Odd Fellow, and in the community where he lived so long he leaves a host of friends to mourn his sudden departure.

The funeral was held from the home Tuesday afternoon, Dr. Holmes Dysinger of Atchison conducting the services in the presence of many friends. The Kendall quartette sang "A Perfect Day" and "Nearer My God to Thee", by request. After the sermon the Odd Fellows, attending in a body, took charge of the remains over which they rendered the service of that order, at the grave. The burial was in the Rose Hill Cemetery on the anniversary of their wedding 28 years ago.

The members of his family, except his mother, who was not able to come so far, and brother Otto, attended the funeral, besides some other relatives from abroad. The bereaved wife and all have the sympathy of many relatives and friends."

I have been told that Mrs. Anna Sills Elling married a Mr. Albert Herbert of South Dakota a few years after the death of Mr. George Elling. I have no definite information on this matter. She is buried beside Mr. George Elling in the cemetery at Valley Falls, Kansas. The stone reads:

George F. Elling 1862—1917
Anne C. Elling 1869—1949

Children:

a A daughter b. d. in infancy

Bernard Paul 2 Elling, (4) (Frederick 1), son of Frederick and Johanna (Baker) Elling, was born in Monee, Illinois on Dec. 6, 1864: died at Cashion, Oklahoma on Dec. 22, 1950, buried at Cashion, Oklahoma. Bernard Paul Elling married on Jan. 21, 1898, near Cashion, Oklahoma, Amelia Bernhart. Amelia Bernhart was born at Lehigh, Kansas on April 7, 1881; died near Cashion, Oklahoma on Dec. 15, 1944, buried at Cashion, Oklahoma.

MR. AND MRS. PHILIP KLAMM

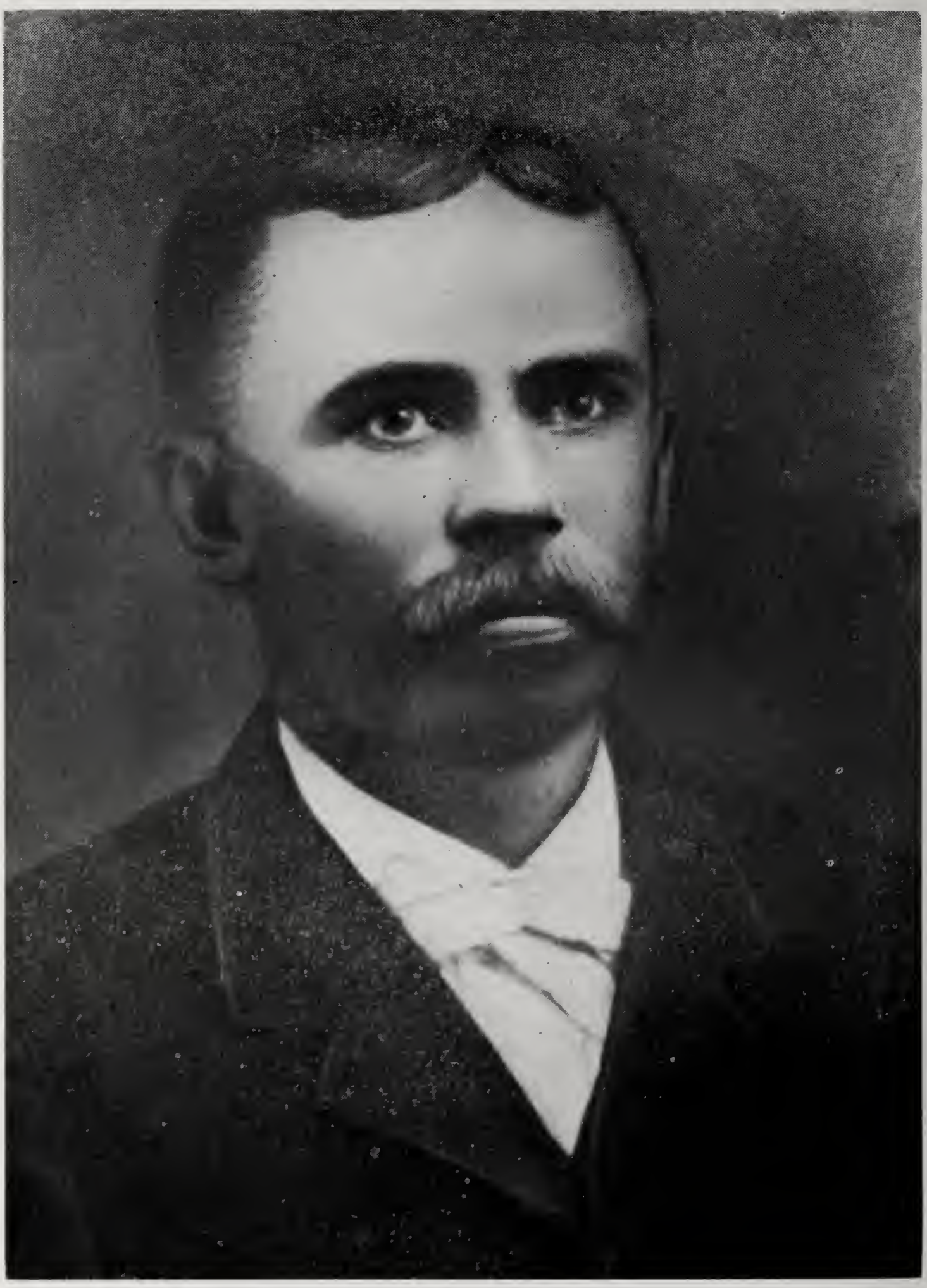

MR. GEORGE F. ELLING

MR. AND MRS. GEORGE F. ELLING

MR. AND MRS. BERNARD P. ELLING

Bernard Paul Elling would have been about 25 years old when he left the home place in Valley Falls and went to Oklahoma. I do not know the exact year that he went to Oklahoma, but his children have informed me that it would have been either in the spring of 1889 when the Oklahoma Territory was opened for homesteading, or within a year or so of this date. Bernard's homestead was located three miles northeast of Cashion. He was a hard worker, but also a neat and meticulous farmer. His rows of corn had to be absolutely straight. He would sight along the rows and if there was a bend or crook in the row, the offending corn plants would be chopped out. Like his brother, Edward, Bernard played the violin.

Amelia Elling was a good example of so many of the women that pioneered the Oklahoma Territory. She worked hard, but she also found time to take an active part in church and neighborhood affairs. She was never too busy to sit up with a sick friend or to help them out in their time of need. She enjoyed quilting. Somehow or other Amelia Elling found the time to make a quilt for all of her children and the earlier grandchildren.

After living on the original homestead for a number of years, Bernard traded it for another quarter section of land located just across the road to the south of the Lee Wright farm.

Mrs. Amelia Elling passed away on Dec. 15, 1944. Mr. Bernard Elling passed away on Dec. 22, 1950. To the members of this family Christmas Time will bring forth memories of previous happy occasions, but each member of this family, whether he or she mentions it or not, will also, at Christmas Time, be reminded of some other occasions that were not so happy.

Children:

	a	Freda	3	b. Nov. 4, 1900	d.	Feb. 9, 1905
14.	b	Sylvia Mae	3	b. April 21, 1904	m.	John Forbis
	c	Inas	3	b. May 21, 1907	d.	June 9, 1907
15.	d	Laroy Edward	3	b. March 15, 1910	m.	Ruth Cornforth
16.	e	Bernice Eva	3	b. Sept. 25, 1913	m.	Emery Chartier
17.	f	Alvin Elmer	3	b. March 1, 1917	m.	Marcella Therese Magrath
	g	Melvin	3	b. June 16, 1920	d.	June 16, ~~1960~~ 1920

Ricka 2 Elling, (5), (Frederick 1), daughter of Frederick and Johanna (Baker) Elling, was born in Monee, Illinois on Oct. 14, 1866; died in St. Joseph, Missouri, on Aug. 20, 1956, buried in Valley Falls, Kansas. Ricka Elling married on March 18 1888, possibly in Holton, Kansas, John Ulrich Fisher, son of of Mr. and Mrs. John Fisher of North Cedar, Kansas. John Ulrich Fisher was born on July 17, 1862, died May 20, 1906, buried in Valley Falls.

It will be recalled that when the Ellings arrived in Valley Falls, Kansas from Monee, Illinois, they stayed with Mr. and Mrs. John Fisher and their family. Mr. and Mrs. John Fisher had five children - Joseph, John, Louis, Ellen and Martha. So it should come as no great surprise that one of the Fisher boys would marry one of the Elling girls. John Ulrich Fisher married Ricka Elling.

For a period of several years, John Fisher and his family had rented a farm located three-quarters of a mile south and two miles west of North Cedar, Kansas. In the year of 1905, John Fisher bought a 108 acre farm not far from the place that he had been renting. During the course of the winter of 1905-1906, he built a new house and put up other improvements on the farm that he had recently acquired. On May 20, 1906, John Fisher had gone down to the farm to nail the last of the shingles on a new hen house. The Fisher Family had not yet moved into their new home. Actually the house was not completely finished. The following newspaper articles relates the circumstances and events that subsequently took place.

A TREACHEROUS TRIGGER

JOHN FISHER ACCIDENTALLY SHOT BY HIS BEST FRIEND SUNDAY WHEN THE SUN WAS LOW

At Fisher's new house they were trying Jas. Green's new hammerless gun when the fatal shot was fired.

A shocking tragedy happened on Cedar last Sunday.

At his new farm house in Jackson County, two miles west of North Cedar, John U. Fisher was accidently shot and killed, instantly, with a hammerless double-barrelled shot gun in the hands of his best friend, Otto VanGaasbeek, Sunday afternoon about 5 o'clock. The full charge of shot passing through the flesh of his left arm entered the left breast at the heart. He dropped to his knees, for a moment, fell forward and expired without uttering a word, though he seemed to try to speak, in death the smile on his face remained.

The news of the sad and terrible accident reached here about sundown, in a telephone call for undertaker Schuler. The coroner of Jackson County, Dr. Darlington at Denison, was promptly notified and early Monday morning summoned a jury and witnesses to the scene of the tragedy. After a hearing of the testimony in the case the jury consisting of Corneal Coleman, Mat Brown, Dan Coleman, John Renfro, F. A. Cannady and C. P. Johnson, returned a verdict to the effect that the deceased came to his death by the accidental discharge of a new hammerless gun in the hands of Otto VanGaasbeck.

How the accident happened and the circumstances leading up to it are here briefly recorded. Johnny Fisher had about finished building a nice house on the Hoxie farm he had purchased a few months ago, and intended to move into it this week. That Sunday morning he had shown the new house to his aged mother. The old home is about 40 rods away. In the afternoon he and his neighbor, Otto Van, were on the premises when Jas. Green, an engineer at Waddel's saw mill near by, came along and joined them, being on his way to Otto's to show him a new hammerless gun with safety lock.

MR. AND MRS. JOHN ULRICH FISHER

After examining it awhile Fisher proposed they try it and see who could put the most shot in a tossed block or part of board. Otto tossed the block and Fisher made the first shot, a good one, putting more than 20 shot in the wooden "bird". Then Otto essayed to try his marksmanship on a similar target which Johnny went to toss up. With gun in hand, Otto awaited the pleasure of Johnny to cast the "bird", when from oversight, or lapse of caution, the trigger was pulled and the gun prematurely discharged just as Johnny was stoping to pick up the target at close range and - the awful deed was done! He had depended on the safety lock which Johnny had failed to reset, or did not realize that the other barrel was loaded as he was used to regular target shooting and the rule of only loading one barrel at a time for safety. The sudden change from joy to sadness palled on Otto. From the impression to the realization of the killing of his boyhood friend a sense of horror overcame him and his mind became almost unbalanced over the heartrending, terrible homocide, and for days his mental and physical condition was lamentable. He brooded over it in silent remorse. For his peace of soul he would willing exchanged places with his friend. But it was purely an accident. He could not help it, now.

John U. Fisher was born in Leavenworth City, July 17, 1862. At that time his father, who died on Cedar a few years ago, was in the employ of the Government, freighting to Ft. Scott, Ft. Smith and other points.

March 1st 1888, he was married to Miss Ricka Elling. To them two daughters were born, Tura, age 17 and Fay, 15, who with his wife, mother, two sisters, Mrs. Wm. Duncanson and Mrs. John Gillies, and Brother, Joseph, survive him.

Truly death loves a shining mark for Johnny as everybody called him, was kind and good natured. He was loved and respected by all who knew him for the sunshine in his soul.

The funeral was held from the home Tuesday morning at 10 o'clock, Rev. Herbst, of Effingham, officiating. The remains were laid to rest in Rose Hill Cemetary near this city.

The bereaved family have the sympathy of many friends. He carried a comfortable sum of Life Insurance." a

A short time after the death of her husband, Mrs. Ricka Fisher and her two daughters, Tura and Faye Eva, went to work and finished their new home. They painted the outside of the house, varnished the inside woodwork, put up the wall paper and put on the finishing touches, which really amounted to a great deal of good hard work. They moved into their new home.

Mrs. Ricka Fisher, with the help of her two daughters, ran the farm for a year. The following year, on February 26, 1908, Tura Fisher married David Harrison Renfro. Mrs. Ricka Fisher and Faye Eva moved to Meriden about this same time. David and Tura Renfro stayed on the farm. Mrs.

a The Farmer's Vindicator, a Valley Falls Newspaper.

Ricka Fisher did not stay in Meriden, Kansas for more than three or four years. When she learned that her father, who was living in Cashion, Oklahoma, was in failing health she went down to Cashion to be with her parents. After the death of Frederick Elling, Mrs. Ricka Fisher, in all probability, stayed on in Cashion, Oklahoma to be with her mother. Mrs. Frederick Elling passed away on Sept. 23, 1919.

Mrs. Ricka Fisher came back up to Valley Falls. David and Tura Renfro had long since left Mrs. Ricka Fisher's farm, but she continued to retain ownership of it and had been renting it out. It was about this time that many banks were closing their doors and Mrs. Ricka Fisher was one of the many victims of the era. She lost all of the money that she had been able to accumulate up to that time. She took a position as a housekeeper for an aged widower for the salary of $5.00 per week and room and board. Most of this wage she saved over a period of years, and then, when most women would have been content to ease up and start taking things easy, Ricka purchased a rather large and old house in Valley Falls. About all that it could boast was one electric light cord coming down from the ceiling in the middle of each room. She divided this old house into small apartments which, in those days, were known as housekeeping room. As the income permitted she modernized the house and in due time each apartment had modern lighting and plumbing facilities. From the income of this remodeled property and her farm, she was able to provide for her maintenance.

Among the happy recollections of Faye Alpha, granddaughter of Ricka, - "The times I stopped to see her after school and we spent many hours at the piano, playing and singing the good old fashioned church songs together," "Rock of Ages", "Let the Lower Lights Be Burning" and so on. Until her eye sight failed her in her late 80's, you could often hear her playing the piano as you approached the house.

"One of the fine lessons she taught me was - "It isn't what you make that counts - it is how you spend and what you save." I'm confident her words of wisdom and her preservance in the face of hardships were great examples to her daughters, my mother Tura, and my aunt Faye Eva. In their way they have handed down Grandmother Ricka's teachings and examples to my generation.

"Pages could be devoted to this wonderful Elling but I'm sure they were all of the same fine stock and each descendent feels the same way about their Elling Grandparent."

Mrs. Ricka Fisher sold her farm along about 1950. In her final years, she stayed with her daughter, Mrs. Faye Smith, in St. Joseph, Missouri. She passed away on August 20, 1956, just 2 months short of being ninety years old.

Children:

18.	a Tura Minnie	3	b. Jan. 8, 1889	m.	David Harrison Renfro
				m.	John Louis Hammond
19.	b Faye Eva	3	b. May 16, 1891	m.	Robert Smith, II

MR. AND MRS. ALBERT L. WRIGHT

THE SECOND GENERATION

Anna Georgia 2 Elling, (6), Frederick 1), daughter of Frederick and Johanna (Baker) Elling, was born in Monee, Illinois on Oct. 19, 1868; died in Guthrie, Okla. on Sept. 16, 1953, buried in Cashion, Okla. Anna Georgia Elling married on Sept. 5, 1888, at Leavenworth, Kansas, Albert Lee Wright. I have not been able to obtain the names of Albert Lee Wrights' parents, the date when he was born or the name of the town in which he was born. Albert Lee Wright died Nov. 15, 1930, buried in Cashion, Oklahoma.

Albert Lee Wright always went by the name of Lee Wright. He entered Oklahoma territory, along with 50,000 other people on April 22, 1889. This was the date when the Okla. Territory was opened for homesteading. He located three miles southwest of Cashion, Oklahoma. Anna did not go into the Oklahoma Territory with her husband. After Lee Wright had gone to Oklahoma, we would be pretty safe in assuming that Anna lived in Valley Falls, Kansas until after her first son, Harley was born. She then joined her husband on the homestead. This arrangement also gave Lee Wright a few months to build a house in which to live in. As I understand it all of the original homesteads consisted of 160 acres. Somewhere along the line, Lee Wright purchased an adjoining 160 acres.

OBITUARY a

ANNA G. WRIGHT

Anna G. Wright was born at Monee, Ill., Oct. 19, 1868; died at the Guthrie Hospital Sept. 16, 1953, at the age of 84 years, 10 months and 28 days. She was the daughter of Frederick and Johanna Elling.

She was confirmed in the Lutheran Church on April 2, 1882.

On Sept. 5, 1888 she was married to Albert Lee Wright at Leavenworth, Kansas. He preceded her in death Nov. 15, 1930.

Two sons were born to the union; Harley M. Wright of Cashion and Noah F. Wright of Tulsa.

Mr. Wright made the run into Oklahoma on April 22, 1889. She joined him a few months later on the homestead three miles southwest of Cashion.

Mrs. Wright was a Past Matron of the Cashion Order of Eastern Star.

Survivors include her two sons: a granddaughter, Carolyn Wright of Tulsa; two sisters, Mrs. Ricka Fisher and Miss Minnie Elling, both of Valley Falls, Kansas; two brothers, Ed Elling of Kansas City, Kansas, and Carl Elling of Manhattan, Kansas; and many nieces and nephews.

Funeral was held Friday afternoon at the Cashion Christian Church, with the pastor Rev. Tepe, officiating, Burial was made in Cashion cemetery.

Children:

20.	a Harley M.	3	b.	1889	never married.
21.	b Noah Frederick	3	b.		

a From the Kingfisher Free Press issue of Sept. 21 1953.

Minnie Margaret 2 Elling, (7), Frederick 1), daughter of Frederick and Johanna (Baker) Elling was born in Monee, Illinois, on Nov. 26, 1870. Minnie Elling never married. She died in Topeka, Kansas on Dec. 7, 1957, buried in Valley Falls, Kansas.

When I was a youngster between ten and twenty years old (1930 - 1940) I didn't know very many of my father's brothers and sisters. I can recall that I had met Aunt Ricka and Uncle Ed and Aunt Rose. I'm sure that, at one time or another I had met most or all of them, but at that time, baseball and football were more important than aunts and uncles. I have lived to regret the poor judgment that I exercised when I was a boy. I have learned more about the Elling Family in the last year than I had in the previous thirty years. You will have noticed by now that all of the emphasis in this book has been placed on the first and second generations. I have tried to include all of the information that I have, so long as it is in good taste and worth while insofar as it reflects the personality of the person concerned. I know that there is a vast amount of information about the Ellings of the second generation that rightfully belongs in this book.

As a boy, I had "met" a number of my other aunts and uncles, but I "knew" Aunt Minnie. She was a lady that possessed considerable "spark". I cannot conceive a situation in which, if Aunt Minnie was present, there would be such a thing as a lull in the conversation. She wasn't the talkative, chatter-box type, she was just alive, vibrant, happy and full of ideas. I rather guess that when with people of her own age - she just plain wore them out with all of her excess vitality. I suspect that she had a grain of determination in her make-up. If she wanted to do something the chances are pretty good that she went right ahead and did it. I recall picnics in Gage Park in Topeka with Aunt Minnie. She would have been no less than sixty years old at the time. I don't recall that she was domineering with her nieces and nephews, but a youngster of ten or fifteen years of age stood less change of pulling off some mischief with Aunt Minnie around than he would have when he was under the close scrutiny of his his own parents.

Minnie Elling worked for the Crosby Brothers Department Store in Topeka. The following notice appeared in the Dec. 8, 1957 issue of the Topeka Daily Capital newspaper:

MISS MINNIE ELLING

"Miss Minnie Margaret Elling, 87, of 521 Huntoon, died Saturday in a Topeka nursing home. She was born at Monee, Ill., and entered the nursing home May 14, 1953. Miss Elling was a retired seamstress.

Surviving are two brothers, Ed Elling, Kansas City, and Carl Elling, Manhattan, and a number of nieces and nephews including Mrs. Mildred Ratz, Valley Falls.

Services will be at 9:30 a.m. Monday at the Wall-Diffenderfer Mortuary. Burial will be in Valley Falls Cemetery."

MISS MINNIE ELLING

MINNIE, ANNA AND RICKA ELLING

Edward Jerry 2 Elling (8) (Frederick 1), son of Frederick and Johanna (Baker) Elling, was born in Monee, Illinois on May 8, 1873. Edward Jerry Elling married on September 4, 1918 at Kansas City, Missouri, Rose Abeline Shelton Bates. Her maiden name was Shelton. The names of her parents is not known. Rose Abeline Shelton was born on Sept. 4, 1883; died in Kansas City, Kansas on April 6, 1958, buried in Elmwood Cemetery, Kansas City, Mo.

It is in the records of the St. Paul Lutheran Church in Monee, Illinois, that Edward Elling was born on the date indicated above. Both Frederick and Christoph Elling were quite generous when it came to naming their children. Sometimes it appears, that the idea was, the more names the better. And here we have a son that does not even have a middle name. Edward did what he could about the situation by informally adopting the middle name of "Jerry".

Edward Jerry Elling should have been a farmer, he would have been a good one. He might have been a farmer had it not been for circumstances, which at the time were important, but now fifty to sixty years later it might seem that maybe they were mere happenstance. Edward helped out with the farm work at Valley Falls. As near as we can figure it out from my many visits with Uncle Ed, he helped out on the home place until 1899. In 1900 Edward share-cropped 80 acres of corn, on a 50-50 basis. He did quite well, and would have been happy to have continued the arrangement but the man with whom Edward had the share-cropping arrangement did not own the land. He had leased it, and his lease had run out. The following crop year, 1901, Albert was busy farming the land that he had rented. Carl had gone to Manhattan to go to College. Farm help was scarce, so Edward farmed the home place. Before the next crop year rolled around Frederick and Johanna Elling had sold the farm in Valley Falls and had gone down to Cashion, Oklahoma. Edward Elling worked around Valley Falls and Leavenworth for about three years when he received word that his brother Carl Elling was in a Kansas City Hospital. This would have been the fall of 1904. Carl Elling was in Kansas City taking care of preparations for his trip to Cuba when he came down with pneumonia. Edward Elling learned of this while working in the vicinity of Leavenworth. He finished up the job and then came on down to Kansas City on the North Western Railroad. On the train Edward met Mr. Meyers, who had a creamery in Kansas City, Kansas. He told Edward to drop around and see him after he had gotten settled in Kansas City. At the time Edward did not think much about it, but after a couple of weeks he went over to the Meyers Creamery to see Mr. Meyers. Mr. Meyers offered him a job of analyzing and keeping records on the in-coming milk. Edward took the job. That is the story of how Edward Elling happened to settle down in Kansas City, Kansas.

Edward worked for Mr. Meyers until about 1911, when he got typhoid fever. While Edward was in the hospital, two Elling girls, Rose and Lotta, came to see him. They lived on a farm just west of Concordia, Missouri. So far as I know they were not related in any way. After recovering from

MR. AND MRS. EDWARD J. ELLING

typhoid fever Edward Elling went to work for Larson Brothers Wholesale Grocery. He left Larson Brothers and started working for The Armour Packing Co. sometime between 1920 and 1925. He worked at Armour until about 1940.

On Sept. 4, 1918, Edward Elling married Rose Abeline Shelton Bates. Rose Abeline Shelton was born probably in New York or Massachusetts. She married Mr. Edward Bates in the East before they came out to Missouri. Rose and Edward Bates lived in Kansas City, Missouri until his death on April 4, 1914. Mr. Edward Bates is buried in Elmwood Cemetery, Kansas City, Missouri. Rose is buried beside her first husband. Edward J. Elling passed away Oct. 3, 1960, buried in Elmwood Cemetery.

Children:
none.

Otto Henry 2 Elling, (9) (Frederick 1), son of Frederick and Johanna (Baker) Elling, was born in Monee, Illinois on Sept. 2, 1877; died at Lawton, Okla. on May 10, 1948 buried in Pecan Cemetery, Lawton, Okla. Otto Henry Elling married April 11, 1904 at Lawton, Okla. Hellen Mae Pool. Hellen Mae Pool was born at Bedford, Iowa, on Feb. 3, 1884; She lives at 2704 Cornell, Lawton, Oklahoma.

"Otto Elling at the age of 19 on Sept. 15, 1896, decided to go to Kansas State College at Manhattan, Kansas. He enrolled there with only the schooling provided by the small country school in Jefferson County. This school was located five miles west of Valley Falls, Kansas and one and a quarter miles south of the Elling farm. Otto never attended high school but by working at farm labor to pay his college expenses and studying diligently he graduated and was presented with a diploma from Kansas State. Otto is to be commended for unusual determination to get a college education by means of his own efforts to work by the hour to meet the college financial obligations as well as to meet the scholastic requirements. After attending college for one or two years Otto was forced by illness to drop out for a year. But the next fall he was back in Manhattan determined to get on with the business at hand. In the years around 1890 to 1900 not many young men reared on farms entertained thoughts that a college education was worth the time, money and labor involved to get it. Otto Elling was one of the first from the Valley Falls area to give it a trial."

After graduating from Kansas State College in 1901, Otto went to Oklahoma. He was working with his brother-in-law, Lee Wright, near Cashion, Oklahoma. One day when they were threshing grain someone mentioned to Otto that he should take a chance on drawing a place in southwestern Oklahoma. He agreed that this sounded like a pretty good idea. His luck was with him on this particular day. His number was in the twelve hundreds. (1246 - ?). Then came the task of going down & selecting a number of quarter sections so that he could give the officials the legal description of the land when his number was called. He had his choice of various quarter sections that he had looked at previously. He chose one of the better quarter sections as indicated by the presence of numerous buffalo wallows. Otto homesteaded this land, which was located near Lawton,

MR. AND MRS. OTTO H. ELLING

Okla., for approximately three years. During this time he found it expedient to work for Lee Wright for a few months in order to get together sufficient cash to put in the necessary improvements.

On one occasion Otto Elling had been away for some time, in an effort to earn enough money to pay the fee for claiming his quarter section. When he returned he found that a claim jumper has settled down on his land. Had he been delayed a short time or had he been a little less determined to own a farm in that area Otto might have lost his claim. As it was, the claim jumper was ousted and the Elling name became well known in that community.

On April 11, 1904, Otto Elling married Hellen Mae Pool in Lawton, Oklahoma. Shortly after their marriage the Otto Ellings went up to Hays, Kansas, where Otto had accepted a position with the Ft. Hays Experiment Station. Their first two children were born at Hays, Kansas. After about three years Otto quit his position at the Experiment Station and took a Job at the Rockefeller Ranch in Kiowa County, Kansas. He worked for the Rockefeller Ranch for a period of somewhat less than a year. In 1908 the Otto Elling family went back to their land west of Lawton, Okla.

From what I have been able to find out there was a fair amount of musical talent in the Elling Family. It is highly doubtful if Otto or any of his brothers or sisters ever took any music lessons, but Otto had a natural talent for music. He played the accordion and the harmonica and he did a very good job of it. While on the subject of music, Otto's brother Edward played the violin, his brother Carl played the harmonica and his sister Ricka played the piano.

Children:

22.	a	Hellen Rachel	3	b. Mar. 19, 1905	m.	Marion Edwin Harding
23.	b	Margaret Louise	3	b. Dec. 28, 1906	m.	Joe Merrell Terrett
24.	c	Carl Emmert	3	b. Jan. 11, 1909	m.	Florence Hawthorne
25.	d	Otto H.	3	b. Mar. 22, 1913	m.	Clara Libbie Black
26.	e	Laddie Joe	3	b. June 18, 1917	m.	Alma Bethene Secrist
27.	f	Christine N.	3	b. Oct. 4, 1920	m.	William Jacob Stricker
28.	g	Kermit Edward	3	b. Oct. 18, 1922	m.	Evelyn Leola Whitehead

Albert 2 Elling, (10), (Frederick 1), son of Frederick and Johanna (Baker) Elling was born in Monee, Illinois on Nov. 24, 1878; died in Basehor, Kansas on April 27, 1951, buried in Glenwood Cemetery, Basehor, Kansas. Albert Elling married on Jan. 24, 1906 at Basehor, Kansas, Cora Ellen Way, daughter of Mr. and Mrs. George Irving Way of Valley Falls, Kansas. Cora Ellen Way was born in White Church, Kansas on Jan. 10, 1886.

Albert Elling in 1901 and 1902 rented land and farmed it. Father and Mother Elling, Albert, Edward and Minnie Elling were still living on the home place in 1901 and part of 1902. In late April or early May of 1903 (note a) Albert went to Birmingham, Kansas to operate the skimming station. He was there for three years and then Meyer Sanitary Milk Co. (note b) transferred him to the skimming station at Wallula, Kansas. It

note b - This name from old photograph.

would probably be more correct to refer to these plants as "creameries" or "milk separating stations". Meyer Sanitary Milk Co. in Kansas City, Kansas the firm that Edward J. Elling worked for from 1904 to 1911, owned the skimming stations in Birmingham, Wallula, Lansing, Basehor & probably many others in northeastern Kansas. These stations operated as follows: The man in charge of the station was responsible for receiving, weighing and testing the incoming milk for percentages of butter fat. He had to keep the records on the quantity of milk received from each farmer. The farmers were paid for their milk at the end of each two week period. The skimmed milk was sold locally, the cream was shipped in by rail to Meyer Sanitary Milk Co.

The power for the cream separator and the other equipment was supplied by a steam engine, which also, conveniently maintained a supply of hot water for washing up the containers and other equipment. The milk, in 5, 10 and 15 gallon milk cans, was picked up at the various farms by the "milk hauler", who took it into town in his horse-drawn wagon.

Albert Elling married Cora Ellen Way on Jan. 24, 1906, at Basehor, Kansas. They continued to live in Wallula, Kansas until 1912. Their daughter, Rose Ruth was six month old when they moved to the farm one mile west of Basehor, Kansas. The farm west of Basehor consisted of 80 acres although for several years they rented an additional 90 acres. About 50 acres of the 80 were under cultivation, the balance being pasture land for the dairy cows. Albert Elling looked after the crops, dairy cattle, pigs and small orchard. Mrs. Cora Elling took as her responsibility the chickens and the garden. She had no trouble selling the eggs and tomatoes to the people in and around Basehor.

Mrs. Cora Elling continues to live on the farm. She has one of the neighbors taking care of the crops and heavy work on a share crop basis.

Children:

	a	Ansel	3	b. Jan. 9, 1908	b.	Aug. 15, 1908
29.	b	Rose Ruth	3	b. Aug. 19, 1911	m.	Ernest C. Jones
30.	c	Albert Lee	3	b. Nov. 18, 1913	m.	Norma Lee Douglas
31.	d	Eunice Jessie	3	b. Nov. 8, 1915	m.	John Penny

Carl George 2 Elling, (11) (Frederick 1), son of Frederick and Johanna (Baker) Elling, was born in Monee, Illinois on Feb. 23, 1881. Carl George Elling married on Aug. 9, 1911, at Manhattan, Kansas. Mary Mudge, daughter of Josiah Bowler and Phoebe Elizabeth (Himes) Mudge of Manhattan, Kansas. Mary Mudge was born in Manhattan, Kansas on July 8, 1886; died in Manhattan, Kansas on June 29, 1948, buried at Manhattan, Kansas.

note a - Farmers Vindicator, Valley Falls newspaper, April 24, 1903 - "Albert Elling is here for a few days and is going to operate the creamery at Birmingham."

1163333

MR. AND MRS. ALBERT ELLING

MR. AND MRS. CARL ELLING

Carl was the last of the Elling children to be born in Monee, Illinois. As near as we can tell, the Elling Family left Monee, Illinois for Valley Falls, Kansas in 1882. Carl Elling left Valley Falls in 1900 to go to school at Kansas State College. After graduation in the spring of 1904 Carl Elling got a job with the Cuban Government to take about 24 head of assorted livestock to Cuba. The animals, beef cattle, hogs, sheep, goats and etc. were bought throughout Kansas and Missouri for shipment to Kansas City. After being down with pneumonia for a couple of weeks, Carl, on the first of January, 1905, left Kansas City and took the livestock to New Orleans. The livestock was loaded into a ship and they were on their way to Cuba. We have Carl Elling's word for it that he didn't particularly enjoy his first two or three days at sea; however, he was not alone in his misery. His animals got sea-sick too.

He spent two to two and a half years in Santiago, Cuba. In 1907 he came back to Manhattan as assistant professor in the Animal Husbandry Department at Kansas State College for two years. At about 1909 Carl went back to Cuba. He was in charge of the livestock on a large plantation at Cienfuegos. He came back to Manhattan in 1910.

In 1908 while he was in Manhattan in the Animal Husbandry Department Carl bought the home in Manhattan. In 1910 he bought a 160 acre farm just out of Nowata, Oklahoma. He still owns and manages this farm, although it is a little bigger than 160 acres now. The ranch now consists of 2,000 acres. He was primarily interested in raising livestock, beef cattle in general, and Herefords in particplar on the farm at Nowata. There were always a few animals around the place in Manhattan.

On August 9, 1911 Carl Elling married Mary Mudge of Manhattan. After their marriage Carl and Mary Elling went to Cashion, Oklahoma for a visit with Frederick and Johanna Elling, and then by covered wagon they went to the farm near Nowata, Oklahoma. They lived on the farm until October 1, 1914. On this date or shortly thereafter, Carl Elling started working for the Extension Department of Kansas State College. His first position was District Agent at Parsons, Kansas. They stayed in Parsons until November 16, 1917 or 1918 when they moved to Manhattan. Carl Elling continued to work for the College as an Extension Specialist, spending most of his time traveling throughout Kansas holding meetings and classes on various phases of livestock production and also judging at state and county 4-H fairs.

Children:

	a	Mary	3	b. July 28, 1912	d.	July 28, 1912
32.	b	Carl Mudge	3	b. Jan. 12, 1915	m.	Geraldine Ruth Burcham
33.	c	Roland Baker	3	b. Sept. 16, 1916	m.	Eleanor Louise Vincent
34.	d	John Wallace	3	b. Sept. 15, 1918	m.	Ruth Cooke
35.	e	Edward Himes	3	b. Dec. 14, 1920	m.	Virginia Rose Fahey
36.	f	Homer Richard	3	b. Jan. 14, 1923	m.	Ida Jeanne Pickering
37.	g	Mary Maxine	3	b. Oct. 6, 1924	m.	Meredith Leon Mayse
38.	h	Helen Wilhelmina	3	b. July 27, 1926	m.	John William Boles

On February 23, 1950, Carl Elling married Francis Shaw Jameson. They were married in Ottawa, Kansas, but have always made their home in Manhattan, Kansas.

Francis Shaw was born on March 8, 1898 in Cedar Point, Kansas. On December 24, 1914 Francis Shaw married James Ralph Jameson. They lived in Ottawa, had four children:

Children:

a James Keith (Jameson)	b. Sept. 30, 1916	
b Kenneth Ralph (Jameson)	b. May 11, 1919	
c Maxine Elizabeth (Jameson)	b. March 1, 1921	d. April 11, 1921
d Milton Alonza (Jameson)	b. Nov. 4, 1922	

Mr. Jameson was a farmer. He passed away on May 14, 1941, and is buried at Vinland, Kansas. Carl and Francis Elling are still living on the home place in Manhattan, but it isn't ten acres anymore. The town has expanded and they had to sub-divide it up into city lots. This took place in 1954. Their address is 701 Elling Drive.

THE SECOND GENERATION

ADDITIONAL NOTES

THE ELLING FAMILIES

ADDITIONAL NOTES

CHAPTER IV

THE THIRD GENERATION

Otto Elling 3 Klamm, (12), (Louisa 2, Frederick 1), son of Philip and Louisa (Elling) Klamm was born in Leavenworth, Kansas on Dec. 17, 1885. Otto Elling Klamm married on June 12, 1918, Clara Poggemeyer. Otto and Clara Klamm lived in Leavenworth, Kansas. Otto Elling Klamm is a meat-cutter or bucher. He is 73 years old and has tried on several previous occasions to retire, but it seems that there is always somebody who needs his help, temporarily. The latest information that I have indicates that he is still working.

Children:
none.

Minnie Elizabeth 3 Klamm, (13), (Louisa 2, Frederick 1), daughter of Phillip and Louisa (Elling) Klamm was born in Leavenworth, Kansas on May 9, 1891. Minnie Elizabeth Klamm married in 1912, William F. Steinbeck. William F. Steinbeck was born on Dec. 9, 1889, died in St. Joseph, Mo. in 1941. William F. Steinbeck was an auto mechanic and ran an auto repair shop in St. Joseph.

Children:
none.

Minnie Elizabeth 3 Klamm Steinbeck, 13), (Louisa 2, Frederick 1), (same as above). Minnie Elizabeth married again on April 9, 1953, to Mr. J. E. Blacet, but unfortunately this marriage was of short duration. Mr. J. E. Blacet died in St. Joseph, Mo. on April 9, 1957. Minnie Blacet still makes her home in St. Joseph, Mo. Throughout her life many of the events of importance have occured on the ninth day of the month. It is with her permission that I list these events.

Dec. 9, 1889—Bill Steinbeck born.
May 9, 1891—Minnie Elizabeth Klamm was born.
Nov. 9, 1907—Her mother passed away.
Feb. 9, 1923—Bill Steinbeck's father passed away.
March 9, 1942—J. E. Blacet's first wife passed away.
April 9, 1953—Minnie married J. E. Blacet.
April 9, 1957—J. E. Blacet passed away.
Dec. 9, 1957—Minnie's aunt, Minnie Elling was buried.

Sylvia Mae Elling, (14) (Bernard 2, Frederick 1), daughter of Bernard and Amelia (Bernhart) Elling, was born in Cashion, Oklahoma on April 21, 1904. Sylvia Mae Elling married on March 1, 1929 at Kingfisher, Oklahoma, John Forbis, son of Mr. and Mrs. Edward G. Forbis of Cashion ,Oklahoma.

Sylvia Mae Elling on more than one occasion has had visions or dreams that portended future events. In the Fall of 1923 Sylvia was dating a boy, Frank Bredel. She undoubtedly had known him for a number of years. Sylvia had two cousins, brother and sister who had married a sister and a brother of this Frank Bredel. Sylvia and Frank were engaged to be married in April, 1924. In early January, 1924, Sylvia had her first vision or dream. It was a vision of seven angels, all moving along in a line. Now this is itself is not too unusual, I imagine a great many of us have had dreams of one sort or another concerning angels. The novelty here is the last angel in this line of seven angels was Sylvia's boy friend, Frank Bredel. At the time she mentioned this vision to Frank and others, but none of them, including Frank, thought a great deal about it.

Three weeks later, January 26, 1924, on a Sunday evening, Sylvia and Frank had been to church. After the services Frank took Sylvia home and then went home himself. He stayed home only a half an hour or so and then he went over to the house where he was living at the time. He was living alone in this house, fixing it up. He and Sylvia were going to live in this house after their marriage. Early next morning he went out to feed the cows. It was his custom to take his shotgun along just in case he had the opportunity to shoot a crow or two. They were something of a nuisance and liked to help themselves to the feed that was put out for the cows. Just exactly what happened nobody knows for sure. Presumably he leaned the shotgun up against the manger, barrel up. Somehow or other the gun went off, killing Frank Bredel. Later that day they found him half in and half out of the manger.

On March 1, 1929, Sylvia Mae Elling married John Forbis. They lived on his father's farm northwest of Cashion, Oklahoma. On another occasion, this would have been about 1933, Sylvia Mae Forbis was in the later stages of pregnancy with her third child, when she had another vision. On this occasion, she told me, it was a vision and not a dream, she was not asleep at the time. The picture that she received was a long funeral procession. It appeared to be about a half a mile long. Now it was Sylvia and her baby that were in the coffin at the head of this long funeral procession winding its way slowly up the hill. Sylvia was happy and pleased to look back and see all of those cars.

Sylvia did not mention this vision to anyone until three weeks later just before the baby was to be born, she told her husband about it. The baby was born dead. Sylvia, as we all know, is still very much alive. At the present time Sylvia is living at 13 West Main St., Edmond, Oklahoma.

Children:

39.	a	Marvone Ruby	4	b.	Nov. 26, 1929	m. William R. Farrell
40.	b	Patsy Jean	4	b.	April 20, 1932	m. Morland Barton
41.	c	Johnie Mae	4	b.	April 7, 1934	m. Artie M. Grimm
42.	d	Jackie Ralph	4	b.	Sept. 1, 1945 adopted.	

LaRoy Edward 3 Elling, (15) (Bernard 2, Frederick 1), son of Bernard and Amelia (Bernhart) Elling, was born in Cashion, Oklahoma on March 15, 1910. LaRoy Edward Elling married on Oct. 17, 1936, at Cashion, Oklahoma, Ruth Lorene Cornforth, daughter of Mr. and Mrs. Keith C. Cornforth of Cashion, Oklahoma.

For a number of years now LaRoy and his family have been living on the home place. He has made a great many improvements on his father's farm. He has a completely modern dairy barn with all of the milk processing equipment that is a necessary part of producing and selling milk He also raises wheat and other cash and feed crops.

Children:

43.	a	Judy Lorene	4	b.	Aug. 31, 1941
44.	b	James Edward	4.	b.	Aug. 15, 1946

Bernice Eva 3 Elling, (16) (Bernard 2, Frederick 1), daughter of Bernard and Amelia (Bernhart) Elling, was born in Cashion, Oklahoma on Sept. 25, 1913. Bernice Eva Elling married on June 19, 1933, at Hennessey, Oklahoma, Emery Chartier, son of Mr. and Mrs. Lester Chartier of Hennessey, Oklahoma. They live in Glendale, Calif.

Children:

45. a Janell 4 b. Feb. 15, 1934 m. Leonard DeLa Cruz

Alvin Elmer 3 Elling, (17) (Bernard 2, Frederick 1), son of Bernard and Amelia (Bernhart) Elling, was born in Cashion, Oklahoma on March 1, 1917. Alvin Elmer Elling married on Oct. 16, 1954, at Glendale, Calif., Marcella Therese Magrath, daughter of Mr. and Mrs. Charles Edw. Magrath of Brooklyn, N. Y. They live in Los Angeles, Calif.

Children:

46. a Michael 4 b. May 13, 1953 adopted June, '56.
47. b Timothy 4 b. Aug. 24, 1955
48. c Deborah 4 b. Jan. 22 1957
49. d Laurie 4 b. Oct. 3, 1958

Tura Minnie 3 Fisher, (18), (Ricka 2, Frederick 1), daughter of John and Ricka (Elling) Fisher, was born near North Cedar, Kansas on Jan. 8, 1889. Tura Minnie Fisher married on Feb. 26, 1908, at the home near North Cedar, David Harrison Renfro, son of Mr. and Mrs. Arthur D. Renfro of Denison, Kansas. David Harrison Renfro died on Dec. 1, 1949, buried at Ukiah, Calif. Tura had no middle name, officially that is, but she "adopted" the name of Minnie, because of her love and admiration for her Aunt Minnie Elling who lived for many years in Topeka, Kansas. David and Tura Renfro lived in the vicinity of North Cedar and Valley Falls, Kansas.

Children:

50. a Faye Alpha 4 b. Jan. 8, 1910 m. George Dale Hewitt
m. Walter A. Bethke

Tura Minnie Fisher 3 Renfro, (18) (Ricka 2, Frederick 1), daughter of John and Ricka (Elling) Fisher, married on Oct. 26, 1931, at Kansas City, Kansas, John Louis Hammond, son of Mr. and Mrs. John Hammond of Valley Falls, Kansas. John Louis Hammond, also known as "Dick" Hammond was born on Aug. 13, 1899. His father was the first mail carrier in Valley Falls, Kansas. John Louis and Tura Hammond live in Kansas City, Missouri.

Children:

none.

Faye Eva 3 Fisher, (19), (Ricka 2, Frederick 1), daughter of John and Ricka (Elling) Fisher, was born near North Cedar, Kansas on May 16, 1891. Faye Eva Fisher married on Sept. 29, 1910, at St. Joseph, Missouri, Robert Smith, II, son of Mr. and Mrs. Robert Smith of Meriden, Kansas. Robert Smith, II, the husband of Faye Eva, was born, probably in Meriden, on Aug. 31, 1889; died in St. Joseph, Missouri on July 20, 1953 buried in Meriden, Kansas. He was an accountant.

Chlidren:

51.	a Robert, III	4	b.	Sept. 15, 1913	m.	Anna E. Miller
52.	b Thelma Levone	4	b.	March 30, 1916	m	Donald L. Hanna
53.	c Joyce Maxine	4	b.	May 21, 1921	m.	Harry G. Bullock

Harley M. 3 Wright, (20), (Anna 2, Frederick 1), son of Albert and Anna (Elling) Wright was born probably in Valley Falls, Kansas, in the year of 1889. Harley Wright never married. Since his father's death in 1930 Harley Wright has run his father's farm southwest of Cashion, Okla. Harley Wright travels quite a bit, particularly in the winter-time, when there isn't too much work to do on the farm.

Noah Frederick 3 Wright, (21), (Anna 2, Frederick 1), son of Albert and Anna (Elling) Wright was born in Cashion, Oklahoma, date of birth unknown. Noah Frederick Wright is married, but the name of his wife and the date of his marriage are unknown. Noah Wright and his family live in Tulsa, Oklahoma.

Children:

54.	a Carolyn	4	b.	Aug 1945	adopted

Hellen Rachel 3 Elling, (22), (Otto 2, Frederick 1), daughter of Otto and Hellen (Pool) Elling, was born in Hays, Kansas on March 19, 1905. Hellen Rachel Elling married on May 26, 1935, at Manhattan, Kansas, Marion Edwin Harding, son of Mr. and Mrs. Edwin Harding of Junction City, Kansas. They live in San Antonio, Texas.

Children:

55.	a Anita Kay	4	b.	Aug. 1, 1940

Margaret Louise 3 Elling, (23), (Otto 2, Frederick 1), daughter of Otto and Hellen (Pool) Elling, was born in Hays, Kansas on Dec. 28, 1906. Margaret Louise Elling married on May 24, 1930, at Lawton, Oklahoma, Joe Merrell TERRETT, son of Mr. and Mrs. Joe K. Terrett of Stephenville, Texas. Joe and Margaret live in Oklahoma City, Okla.

Children:

56.	a Joe Elling	4	b.	May 10, 1934	m.	Norma Janice Sutherland

Carl Emmert 3 Elling, (24), (Otto 2, Frederick 1), son of Otto and Hellen (Pool) Elling, was born in Lawton, Oklahoma on Jan. 14, 1909. Carl Emmert Elling married on Dec. 26, 1934, at Altus, Oklahoma, Florence Hawthorne, daughter of Mr. and Mrs. Leo Hawthorne of Lawton, Oklahoma. They live on a farm west of Cache, Oklahoma. In my family this particular Carl Elling was always referred to as Carl Emmert or Cousin Carl. Having a Father, Carl Elling and a brother, Carl Elling created enough confusion. Carl Emmert probably does not have much trouble keeping busy. He teaches Vocational Agriculture at the Cache High School and at the same time runs a farm-harvesting and raising assorted livestock. Carl and Florence have five children:

Children:

57. a Karen Sue 4 b. June 11, 1940
58. b Marel Lynn 4 b. June 23, 1942
59. c Ardith Ann 4 b. Oct. 25, 1944
60. d Cynthia Nell 4 b. Jan. 24, 1947
61. e Henry Carl 4 b. Nov. 4, 1949

Otto H. 3 Elling, Jr. (25), (Otto 2, Frederick 1), son of Otto and Hellen (Pool) Elling, was born in Lawton, Oklahoma, on March 22, 1913. Otto H. Elling married on Aug. 28 1938 at Wesley Chapel Methodist Church, Lawton, Oklahoma, R. R. No. 3: Clara Libbie Black, daughter of Mr. and Mrs. Silas Oliver Black of Cache, Oklahoma. Otto H. Elling, Jr. is a Methodist Minister in Wilburton, Oklahoma. He received his education in Ministry from Oklahoma City University, a Methodist College in Oklahoma City. His church is the First Methodist Church in Wilburton, Oklahoma. Otto H. Elling, Jr. still owns his farm, which he purchaesd from his mother. This farm at one time belonged to Hellen Pool's Father. It is located one mile north and three-quarters of a mile west of the Otto Henry Elling farm, the home place. Reverend Otto H. Elling does not have the time to run his farm. It is rented out.

Children:

62. a Ronald Wesley 4 b. August 13, 1941
63. b Ronda Janelle 4 b. Feb. 3, 1949

Laddie Joe 3 Elling, (26) (Otto 2, Frederick 1), son of Otto and Hellen (Pool) Elling, was born in Lawton, Oklahoma, on June 18, 1917. Laddie Joe Elling married on August 15, 1942, at Lakeland, Florida, Alma Bethene Secrist, daughter of Mr. and Mrs. John Herbert Secrist of Woodward, Okla. Laddie Joe Elling received his Doctors Degree in Forestry and Plant Breeding from the University of Minnesota. He is a professor in the Department of Forestry and Plant Breeding at this same school.

Children:

a John Otto 4 b. Aug. 10, 1950 d. Feb. 14, 1951
64. b Joe Kerry 4 b. Aug. 16, 1954
65. c Mary Elizabeth 4 b. July 26, 1956
65.1 . d Jean Anne 4 b. April 6, 1959

Christine N. 3 Elling, (27), (Otto 2, Frederick 1), daughter of Otto and Hellen (Pool) Elling, was born in Lawton, Oklahoma, on October 4, 1920. Christine N. Elling married on Dec. 19, 1939, at Wichita Falls, Texas, William Jacob Stricker, son of Mr. and Mrs. William Charles Stricker of South Fork, Pennsylvania. William "Bill" Stricker is a C.W.O. - 4 in the Regular Army Air Force. He has been in the service for 24 years. William and Christine live in Midwest City, Oklahoma.

Children:

66. a Antony Elling 4 b. Sept. 2, 1940
67. b Teresa Hellen 4 b. June 24, 1948
68. c William Charles 4 b. July 5, 1952

Kermit Edward 3 Elling, (28), (Otto 2, Frederick 1), son of Otto and Hellen (Pool) Elling, was born in Lawton, Oklahoma, on Oct. 18, 1922. Kermit Edward Elling married on June 30, 1943, at Duncan, Okla., Evelyn Leola Whitehead, daughter of Mr. and Mrs. Albert P. Whitehead of Roswell, New Mexico. Evelyn Leola Whitehead was born near Faxon, Okla. on Aug. 19, 1926. Kermit is farming the home place, the quarter section of land that his father homesteaded.

Children:

69.	a Jerry Wayne	4	b.	Nov. 15, 1950
70.	b Edward Gail	4	b.	Sept. 25, 1954
71.	c Edwin Gene	4	b.	Sept. 30, 1955
72.	d Danny Lee	4	b.	Sept. 22, 1944
73.	e Rhonda Kaye	4	b.	April 25, 1947
74.	f Randy Kermit	4	b.	April 25, 1947

Rose Ruth 3 Elling, (29), (Albert 2, Frederick 1), daughter of Albert and Cora (Way) Elling, born in Wallula, Kansas on Aug. 19, 1911. Rose Ruth Elling married on June 18, 1932, at Warrensburg, Missouri, Ernest C. JONES, son of Mr. and Mrs. Ernest Chappel Jones, Sr. of Slater, Missouri. Rose Ruth is known by her middle name. Ernest and Ruth Jones live in Kansas City, Missouri.

Children:

75.	a Donald Lee	4	b.	Oct. 2, 1938
76.	b Brent Ernest	4	b.	July 17, 1949

Albert Lee 3 Elling, (30), (Albert 2, Frederick 1), son of Albert and Cora (Way) Elling, born in Basehor, Kansas on November 18, 1913. Albert Lee Elling married on June 24, 1942, at Belton, Missouri, Norma Lee Douglas, daughter of Mr. and Mrs. Ed Douglas of Ieavenworth, Kansas. Albert Lee is known by his middle name. Lee and Norma Elling live in Leavenworth, Kansas.

Children:

77.	a David Lee	4	b.	Nov. 27, 1943
78.	b Judy Ann	4	b.	Jan. 23, 1947
79.	c Susan Lynn	4.	b.	June 22, 1956

Eunice Jessie 3 Elling, (31), (Albert 2, Frederick 1), daughter of Albert and Cora (Way) Elling, born in Basehor, Kansas on Nov. 8, 1915. Eunice Jessie Elling married on June 8, 1933, John PENNY. John and Eunice Penny made their home in Basehor, Kansas. Eunice Jesse Penny died of pneumonia on March 27, 1938, buried in Glenwood Cemetery, Basehor, Kansas.

Children:
None.

Carl Mudge 3 Elling, (32), (Carl 2, Frederick 1), son of Carl and Mary (Mudge) Elling, was born at Manhattan, Kansas on Jan. 12, 1915. Carl Mudge Elling married on July 18, 1941, at Kansas City, Kansas, Geraldine Ruth Burcham, daughter of Mr. and Mrs. D. H. Burcham of Kansas City, Kansas.

Carl Mudge Elling for a number of years was the 4-H County Agent of Hodgeman County, Kansas. He now has the Pontiac Automobile Agency in Marion, Kansas.

Children:

80.	a Carl Mudge, Jr. 4	b.	Sept. 25, 1945
81.	b Robert Dee 4	b.	March 7, 1949
82.	c Beverly Jane 4	b.	Aug. 28, 1951
83.	d Joan Elaine 4	b.	Sept. 11, 1954
84.	e Mariann 4	b.	April 27, 1957

Roland Baker 3 Elling, (33), (Carl 2, Frederick 1), son of Carl and Mary (Mudge) Elling, was born at Parsons, Kansas on Sept. 16, 1916. Roland Baker Elling married on Dec. 15, 1940, at Ottawa, Kansas, Eleanor Louise Vincent, daughter of Mr. and Mrs. Stephen H. Vincent of Ottawa, Kansas.

Roland Baker Elling was the County Agent in Franklin County, Kansas for several years. At the present time he is with the National Live Stock and Meat Board in Chicago, Illinois. Carl and Mary Elling had a reason for naming their second son 'Roland". The following newspaper article tells the story better than I could:

TRUE TO FATHER'S DREAM a

K. S. C. SENIOR IS BEST LIVESTOCK JUDGE AT CHICAGO

Thirty-four years ago Roland Elling's Parent Played a Similar Role and Made a Pledge

"Chicago, Nov. 29 (1937) - Roland B. Elling, 21, of Manhattan, a senior in Kansas State College, was receiving congratulations at the International Livestock Exposition here today while friends were recalling he had made a 34-year prophecy come true.

"In 1903, Kansas State College sent its first livestock judging team to the Chicago show, a team coached by Roland J. Kinzer, now secretary of the American Hereford Cattle Breeders' Association at Kansas City, but then on the Kansas State faculty. On the 1903 team was a senior student, Carl G. Elling. Elling told Kinzer that if he won in the contest he would name his son after him.

BEST OF 200 STUDENTS

"After graduation, Elling married, an true to his pledge, named a son Roland and guaranteed he, too, would some day be high man in the Chicago contest. Roland came here with the Kansas State team this week and last night it was announced he was the high man among the more than 200 senior students from twenty-four state colleges participating in the contest.

"Kinzer had the pleasure of seeing his namesake introduced at the Saddle and Sirloin Club dinner last night. Elling, the father of Roland, is extension animal husbandryman at Kansas State College."

a From the Kansas City Star.

Roland and Eleanor Elling have two children:

85. a Roland James 4 b. Dec. 8, 1941
86. b Janet 4 b. Aug. 3, 1946

John Wallace 3 Elling, (34) (Carl 2, Frederick 1), son of Carl and Mary (Mudge) Elling, was born at Manhattan, Kansas on Sept. 15, 1918. John Wallace Elling married on Oct. 10, 1940 at Indianapolis, Indiana, Ruth Cooke, daughter of Mr. and Mrs. R. F. Cooke of Indianapolis, Indiana. They live in Detroit, Michigan where John is the sales manager, Bulk Flour Division of International Milling Company.

Children:

87. a John Karl 4 b. May 10, 1942
88. b George Franklin 4 b. July 4, 1944

Edward Himes 3 Elling, (35), (Carl 2, Frederick 1), son of Carl and Mary (Mudge) Elling, was born at Manhattan, Kansas on Dec. 14, 1920. Edward Himes Elling married on Oct. 14, 1949 at Toledo, Ohio, Virginia Rose Fahey, daughter of Mr. and Mrs. T. E. Fahey of Defiance, Ohio. They live in Prairie Village, Kansas. Edward works for The Paniplus Company of Kansas City, Mo.

Children:

89. a Mary Margaret 4 b. Jan. 4, 1953
89.1. b Edward Fahey 4 b. May 19, 1959

Homer Richard 3 Elling, (36), (Carl 2, Frederick 1), son of Carl and Mary (Mudge) Elling, was born at Manhattan, Kansas on Jan. 14, 1923. Homer Richard Elling married on Sept. 9, 1944 at Reno, Nevada, Ida Jeanne Pickering, daughter of Mr. and Mrs. Louis Emerson Pickering of Sacramento, Calif. Homer and Jeanne live in Pullman, Washington, where Homer is doing post-graduate work at Washington State College. They have one daughter, Patsy; and a stepdaughter, Suzanna.

Children:

90. a Suzanne Joy McCord 4 b. June 23, 1940
91. b Patsy Jeanne 4 b. June 4, 1946

Mary Maxine 3 Elling, (37), (Carl 2, Frederick 1), daughter of Carl and Mary (Mudge) Elling, was born at Manhattan, Kansas on Oct. 6, 1924. Mary Maxine Elling married on April 4, 1947 at Manhattan, Kansas, Meredith Leon MAYSE, son of Mr. and Mrs. H. C. Mayse of Ashland, Kansas. Meredith and Mary Maxine live in Odessa, Texas. Meredith has always used the nickname of "Bus" and Mary Maxine has always been called either Maxine or "Mick". Meredith is an insurance adjustor, he works for the General Adjustment Bureau.

Children:

92. a Patricia Ann 4 b. Aug. 26, 1948
93. b Michael Robert 4 b. March 31, 1952

Helen Wilhelmina 3 Elling, (38), (Carl 2. Frederick 1), daughter of Carl and Mary (Mudge) Elling, was born at Manhattan, Kansas on July 27, 1926. Helen Wilhelmina Elling married on Sept. 2, 1947 at Manhattan, Kansas, John William BOLES, son of Mr. and Mrs. Ralph B. Boles of Manhattan, Kansas. John and Helen live in Pleasant Hill, Calif. John works as a project engineer for Ehrhart Associates, a company that designs and builds oil refineries and petro-chemical plants.

Children:

94.	a John David	4	b. Oct. 31, 1948
95.	b Mary	4	b. Aug. 18, 1950

THE ELLING FAMILIES

ADDITIONAL NOTES

THE THIRD GENERATION

ADDITIONAL NOTES

THE ELLING FAMILIES

ADDITIONAL NOTES

THE THIRD GENERATION

ADDITIONAL NOTES

CHAPTER V

THE FOURTH GENERATION

Marvone Ruby, (4) Forbis, (39) (Sylvia 3, Bernard 2, Frederick 1), daughter of John and Sylvia (Elling) Forbis, was born in Cashion, Okla. on Nov. 26, 1929. Marvone Ruby Forbis married on August 6, 1949, at Cashion, Oklahoma, William R. Farrell, son of Mr. and Mrs. William T. Farrell of Cushing, Okla.

Children:

96.	a Mike	5	b.	April 27, 1954
97.	b Walter	5	b.	July 11, 1955
98.	c Melva Lee	5	b.	Nov. 15, 1957

Patsy Jean (4) Forbis, (40) (Sylvia 3, Bernard 2, Frederick 1), daughter of John and Sylvia (Elling) Forbis, was born in Hennessey, Oklahoma on April 20, 1932. Patsy Jean Forbis married on Nov. 18, 1956, at Edmond, Oklahoma, Morland Barton, son of Mr. and Mrs. A. T. Barton of Higgins, Texas.

Children:

98.1	a Pamela Jean	5	b	April 5, 1960

Johnie Mae (4) Forbis, (41) (Sylvia 3, Bernard 2, Frederick 1, daughter of John and Sylvia (Elling) Forbis, was born in Oklahoma City, Oklahoma on April 7, 1934. Johnie Mae Forbis married on March 1, 1953 at Cashion, Oklahoma, Artie M. Grimm, son of Mr. and Mrs. Floyd H. Grimm of Perkins, Okla.

Children:

99.	a Cherie Lynn	5	b.	Dec. 27, 1955 adopted
100.	b Theresa Ann	5	b.	Aug. 25, 1958 adopted

Janell 4 Chartier, (45) (Bernice 3, Bernard 2, Frederick 1), daughter of Emery and Bernice (Elling) Chartier, was born in Hennessey, Okla. on Feb. 15, 1934. Janell Chartier married on March 1, 1953 at Quartzsite, Arizona, Leonard DeLaCruz, son of Mr. and Mrs. Jose F. DeLaCruz of Stockton, Calif.

Children:

101.	a Paul	5	b.	May 4, 1954
102.	b Jerry	5	b.	Jan. 20, 1957

Faye Alpha 4 Renfro, (50), (Tura 3, Ricka 2, Fredericka 1), daughter of David and Tura (Fisher) Renfro, was born in Denison, Kansas on Jan. 8 1910. Faye Alpha Renfro married on Dec. 13, 1926, at Topeka,

Kansas, George Dale Hewitt, son of Mr. and Mrs. Homer Hewitt of Little Rock, Arkansas. George Dale, I believe, was known by the name - Dale Hewitt. Dale and Faye Alpha lived in a number of different towns, Valley Falls, Topeka, McAllen, Texas, and Peoria, Illinois. He was a civil engineer. George Dale Hewitt died in Peoria, Illinois on Oct. 31, 1944, buried in Valley Falls, Kansas.

Children:

103. a George Dale, Jr. 5 b. Jan. 21, 1928

Faye Alpha 4 Renfro Hewitt, (50), (Tura 3, Ricka 2, Frederick 1), (same as above). Faye Alpha Renfro Hewitt married again on Sept. 15, 1946, at Valley Falls, Kansas, to Walter A. Bethke, son of Mr. and Mrs. Henry Bethke of Milwaukee, Wisconson. Walter A. Bethke is the State Field Manager of Retail sales for The L. B. Price Mercantile Co. Walter and Faye Bethke live in Peoria, Illinois.

Children:

None.

Robert 4 Smith, III, (51), (Faye Eva 3, Ricka 2, Frederick 1), son of Robert and Faye Eva (Fisher) Smith, was born in Oregon, Missouri on Sept. 15, 1913. Robert Smith, III married on Oct. 15, 1947 at St. Joseph, Missouri, to Anna E. Miller, daughter of Mr. and Mrs. Ambrose Miller of St. Joseph, Missouri. Robert Smith is in the real estate business, in St. Joseph, Missouri.

Children:

104. a Linda Diana 5 b. June 3, 1949

Thelma Levone 4 Smith, (52), (Faye Eva 3, Ricka 2, Frederick 1), daughter of Robert and Faye Eva (Fisher) Smith, was born in Leonardville, Kansas, on March 30, 1916. Thelma Levone Smith married on Feb. 9, 1938 ,at St. Joseph, Missouri, to Donald L. Hanna, son of Mr. and Mrs. _____ Hanna of Maryville, Missouri. They live in St. Joseph, Missouri.

Children:

None.

Joyce Maxine 4 Smith, (53), (Faye Eva 3, Ricka 2, Frederick 1), daughter of Robert and Faye Eva (Fisher) Smith, was born in St. Joseph, Missouri on May 21, 1921. Joyce Maxine Smith married on July 4, 1940, at St. Joseph, Missouri, to Harry G. Bullock, son of Mr. and Mrs. Harry Bullock of St. Joseph, Missouri. They live in St. Joseph, Missouri.

Children:

105. a Patrecia Joyce 5 b. May 22, 1941
106. b Charlotte Jean 5 b. Oct. 4, 1942

Joe Elling 4 Terrett, (56), Margaret 3, Otto 2, Frederick 1), son of Joe and Margaret (Elling) Terrett, was born in Oklahoma City, Okla. on May 10, 1934. Joe Elling Terrett married on Dec. 4, 1953 at Wichita

Falls, Texas, Norma Janice Sutherland, daughter of Mr. and Mrs. Harold A. Sutherland of Duncan, Okla. Norma and Joe Terrett were divorced on April 17, 1958. Norma lives in Duncan, Okla., and has custody of the children. Joe Terrett lives in Drumright, Okla.

Children:

107. a Robin Jo 5 b. Jan. 31, 1956
108. b Martin Jan 5 b. Feb. 19, 1957

Joe Elling 4 Terrett, (56), (Margaret 3, Otto 2, Frederick 1), (same as above), son of Joe and Margaret (Elling) Terrett married on October 9, 1959 at Oklahoma City, Okla. Shirley Ann Braudrick, daughter of Mr. and Mrs. Windel Braudrick of Oklahoma City, Okla. They live in Oklahoma City. Oklahoma.

Children:

109. a Ellen Denise 5 b. July 11, 1960.

Donald Lee 4 Jones, (75), (Rose Ruth 3, Albert 2, Frederick 1), son of Ernest and Ruth (Elling) Jones, was born in Kansas City, Mo. on Oct. 2, 1938. Donald Lee Jones married on Aug. 26, 1959, at the Westport Presbyterian Church, Kansas City, Mo., Carol Diane Lowe, daughter of Mr. and Mrs. Robert L. Lowe of Kansas City, Mo. Donald and Diane Jones live in Lawrence, Kansas.

Children:

THE FOURTH GENERATION

ADDITIONAL NOTES

THE ELLING FAMILIES

ADDITIONAL NOTES

THE FOURTH GENERATION

ADDITIONAL NOTES

THE ELLING FAMILIES

ADDITIONAL NOTES

THE FIFTH GENERATION

ADDITIONAL NOTES

THE ELLING FAMILIES

ADDITIONAL NOTES

THE FIFTH GENERATION

ADDITIONAL NOTES

THE ELLING FAMILIES

ADDITIONAL NOTES

CHAPTER VI

THE GERMAN ANCESTORS OF THE BAKERS

Johann Christian Boecker (G-40), was the son of Christoph Boecker who married Maria Hedwig Traupe. Johann Christian Boecker married Engel Rosine Luise Ducker of Ohlendorf in the year of 1794. She died in Sulbeck on 28 April 1810, age 31 years. In 1811 Johann Christian Boecker remarried, the name of his second wife, Johanna Catharine Elisabeth Bode. Johann Christian Boecker died in Sulbeck on 29 Nov. 1819.

Children:

G-41. Johann Christian Ludwig b. 19 July 1800.

Johann Christian Ludwig Bocker (G-41), (Johann Christian Boecker, Christoph Boecker), son of Johann Christian Boecker, was born at Sulbeck on 19 July 1800, baptized 22 July 1800 at Stockheim. Johann Christian Ludwig Bocker married Henrike Justine Schluter on 21 Nov. 1826, at Stockheim. Henrike Justine Schluter was born at Sulbeck on 24 Oct. 1808, baptized on 30 Oct. 1808 at Stockheim.

Children:

G-41.1 Johanna b. 13 Sept. 1837. m. Friedrich Elling.

Johanna Bocker was baptized Johanna Louise Wilhelmina Amelia Bocker on 8 Oct. 1837, at Stockheim. Johanna had many brothers and sisters which are listed in the following section. They came to America in 1856, settled in Monee, and other parts of Illinois. Johanna Louise Wilhelmina Amelia Bocker married Johann Friedrich Peter Elling, G-22, in Monee, Illinois, on Jan. 5, 1857.

THE ANCESTORS OF HENRIKE JUSTINE SCHLUTER

Johann Andreas Schluter, (G-42), ancestors unknown, lived in Sulbeck. Johann Andreas Schluter married in 1765, Dorothea Sophie Hesse. Dorothea Sophie Hesse was born in Druber, the daughter of Christoph Hesse. At one time, Johann Andreas Schluter was a burgomaster or mayor of the village of Sulbeck.

G-43. Johann Justus Gerhard. bapt. 15 July 1769

Johann Justus Gerhard Schluter, (G-43), (Johann Andreas Schluter), son of Johann Andreas Schluter, lived in Sulbeck. Johann Justus Gerhard Schluter was born in Sulbeck, baptized in Stockheim on 15 July 1769. He married on 12 June 1800, in Stockheim, Dorothea Margareta Seelen, daughter of Casper Seelen of Druber. Dorothea Margareta Seelen was born in Druber, baptized on 16 Feb. 1779. She died in Sulbeck on 12 Sept. 1850, age 70 years, 10 months and 27 days. Johann Justus Gehard Schluter died in Sulbeck on 3 July 1841.

G-44. Henrike Justine b. 24 Oct. 1808 m. Johann Christian Ludwig Bocker (G-41)

References:

Copies of baptismal certificates, marriage certificates and death certificates from Dem Ev. Lutherischen Kirchengemeinde St. Martini at Stockheim.

Extracts out of the acts Hannover Br. Arch. Des. 72 IV A, Einbeck, contracts, etc. Staatsarchiv Hannover, Volumes 1750 to 1820.

Extracts out of the acts Hannover Br. Arch. Des. 72 IV C, Einbeck, marriage settlements. Staatsarchiv Hannover. Volumes 1763 to 1800.

MAP OF SULBECK AREA

CHAPTER VII

THE FIRST GENERATION

In this section of the book, it will be noticed immediately that in some branches of the family I have been unsuccessful in obtaining even the most fundamental information. Take for example the first individual listed in this section of the book, 1. Christoph 1 Baker. I have not been able to locate any of his descendents, and lacking information regarding the dates of birth, marriage and etc. on this branch of the family a search of old newspaper files and of the county and state records would be a slow process with little assurance of finding authentic information. All of the information presented in this book is correct to the best of my knoweldge. In a book of this sort, if there is any question as to the accuracy of any of the information it is either printed, with qualifications, or it is left out entirely.

The first generation Bakers came from Sulbeck (two dots over the "u"), Einbeck County, Hannover Province, Germany. The thoughtful reader will take a second look at that last sentence. There has been, in the course of writing this book, three or four questions of primary importance to the author. A considerable amount of time, effort and a multiplicity of different aproaches have been used in an effort to find the answers to these questions. The name of the village in Germany where the first generation Bakers were born and raised was one of these questions.

The name, Baker, is not a proper name in Germany, The German form of this name is Bocker, with two dots over the letter "o". Bocker without the dots over the "o" is an entirely different name. While it is incorrect, I have used the form "Bocker" without the two dots over the "o" in order to save typesetting costs.

AUGUST BAKER a

"August Baker is one of the original settlers of Wyandotte County, Kansas, coming here in 1870. He was born in Germany on April 21, 1842, being the sixth of nine children born to Chris and Hannah Baker, also native Germans. The subject of this sketch, at the early age of eight years, was so unfortunate to lose both his parents, their deaths being caused by cholera, which terrible epidemic swept Germany during the year 1850. In August, 1856, when only fourteen years of age, he emigrated to the United States, setling with an older brother, Henry, who now resides in Champaign County, Ill. He also resided in this county until the opening of the Rebellion when he enlisted in the First Illinois Light Artillery, under Capt. Chaney, who resigned at Jackson, Miss., and was succeeded by Lieut. H. H. Burton. His regiment was a member of the sixteenth Army Corps. under Gen. John A. Logan, whose fortunes he followed until the closing of the war. The principal engagements in which he took part were Memphis, Corinth, seige of Vicksburg, Jackson, and those battles in which Sherman participated in his famous march to the sea. His regiment was sent to Missionary Ridge to reinforce Gen. Grant, and served in the left wing of this battle. He then went to Knoxville, Tenn., where Gen. Burnside was surrounded by Gen. Longstreet, after which he went to Chat-

tanooga, where he remained until his regiment received orders to go to Chicago to be mustered out of service. They passed through Indianapolis, Ind., where they were banqueted by the citizens, receiving their first good dinner in three years. While at Atlanta, Ga. on July 22, 1864, he and his entire company was captured by the Confederates. He was driving a piece of artillery at the time of his capture, but after remaining in the hands of the Confederates a short time, he became tired of being shot at by his own comrades, and he and a fellow-driver, named John Singleton, managed to escape, and hid in a ditch until the Union army advanced, when they were rescued from their dangerous position. After being mustered out of the service, Mr. Baker came to Fort Leavenworth, Kas., and hired out as a teamster to Smith and Lambert, hauling Government supplies to the soldiers at Fort Union, Colo., which place they reached in July, 1865. He then quit the company, and with twenty-three other teamsters started for California, but after a twelve days' march were surprised by the Indians, who killed and scalped two of their comrades and stole their mules. Becoming disheartened at these misfortunes, they returned to Fort Union, and after spending some time as a herder, Mr. Baker went to Fort Lyons, Colo., where he remained until the spring; then becoming assistant wagon boss, he took a train to Kansas City, Mo., where he received his discharge and returned to Chicago. Here he enlisted in the Twentieth United States Infantry, and went to Norfolk, where he was uniformed and sent to Richmond. He joined his regiment at this place, after which he was sent to New Orleans, and was promoted to the position of provost-sergeant. After remaining there six months he went to Baton Rouge, thence to Shreveport, where he, with his regiment, took the train for Marshall, Texas. While there, he was appealed to by the people of Boston, Texas, for protection from the depredations of Col. Baker and his gang of desperadoes. The subject of this sketch was then sergeant, was given command of some men, and although he and his men surrounded a saloon in which Baker was, he succeeded in making good his escape on a mule which he had stolen, after having shot a man named Titoos. Baker afterward captured a train of supplies, after killing three of the four men on the train, but as he made his headquarters in the canebrake, it was found impossible to effect his capture, although a company of calvarymen hunted the country for miles around for two weeks. He was afterwards shot by his brother-in-law, at Orton Bros.' Circus, which was held at Boston, Texas. The band of desperaroes entered the tent, began shooting right and left, and riding in the ring, cleared the tent. The soldiers secured their arms, and in their attack of these men succeeded in killing three, and captured four more. The latter were secured in jail, but the following morning, as the jailer went to take his prisoners their breakfast, they shot him down and escaped. They were pursued by our subject and his men, but would not surrender until another of their number had been killed. The troops stayed at Boston for seven months, notwithstanding the threats received by them from the friends of the dead men. They were then ordered to Fort Ransom, Dak., where the Indians were troublesome, and here Mr. Baker remained until August, 1869, when he was discharged and returned to Illinois. He then went to Nebraska to engage in farming, but while on his way to Leavenworth to purchase a team and supplies he had his money stolen from him at St. Joseph, and for a time was compelled to hire out. He worked here until the following fall, then bought a team and a mower, having received

MR. AND MRS. AUGUST BAKER

some aid from his Illinois friends, by the sale of some land. He cut grass and harvested that summer and fall, after which he went to Frement, Neb. and on August 5, 1870 was married to Miss Mena Falke, a daughter of Henry Falke. She accompanied her husband to Wyandotte County, Kans., and here they purchased some land and settled down to farming. They now own 160 acres of fine farming land, on which is erected a new house, good barns, fences, etc. They have a family of four children: William, Chris, Frank and August. Mr. Baker is a Republican, a member of the Farmer's Mutual Benefit Association, and is president of the same at Rock Lodge No. _____. He and his wife and children are members of the Lutheran Church of Leavenworth, and for the last three years he has been trustee of his township, and was treasurer for two years. He is an upright gentlemen in every respect, and is a worthy citizen in his community."

* * * *

a Copied from: Wyandotte County and Kansas City, Kans. Historical and Biographical. The Goodspeed Publishing Company, 1890. Chicago, page 498.

Cover - Biographical and Historical Memoirs of Kansas.

OLD BUSINESS MAN IS DYING b

SIXTY-FIVE YEARS OLD

MR. WILLIAM H. BAKER THIS AFTERNOON IS SINKING RAPIDLY AT THE HOSPITAL

"Word from St. Joseph's hospital at 3:30 this afternoon stated that Mr. William H. Baker, who has been a patient there for some time, is sinking rapidly ,and the end is not more than a few hours distant. While his condition has been critical for several days, it was not until this noon that is was apparent that he was dying. His family; relatives and many of his close friends are at the hospital this afternoon at his bedside.

"Mr. Baker is one of the best known business men in the city, having been in the harness and saddlery business on North East street for the past twelve years. His sudden sickness was a surprise to his friends, and relatives as he has always been of healthy constitution. His place of business has been closed for the past two days on acount of his serious illness and late this afternoon the word was received of his dying condition. Last Sunday night he was attacked with a stroke of apoplexy and the next morning was removed to St. Joseph's hospital, where he has rapidly grown worse.

BORN IN GERMANY

"Mr. Baker is of German descent, having been born in Hanover, Aug. 17, 1844. His parents died during the cholera plague while he was very young, and at the age of nine years he came to this country with his older brother, who settled at Champaign. While a boy he learned the harness maker's trade in the shop of George E. Hessel, of Champaign, now deceased. In 1859 he married Miss Mary Witt (possibly Vitt) of Champaign and to the union were born five children all of whom are living.

LOCATED HERE IN 1891

"In 1891 Mr. Baker moved to this city and opened a harness shop just north of the city hall which has has run ever since. On January 4, 1905, his loving wife passed away, after a short illness.

"Mr. Baker his two brothers and one sister, who also came to this country from Germany. These are August Baker, who lives in Kansas City; George Baker of Whitehall, who returned yesterday to his home after visiting his brother a few days; and Mrs. Fred Myer, a sister of Maunee, Ill. His five children all live in this city. They are Mrs. Thos. H. Ramage of South McLean Street. Mrs. B. H. Hayes, Mrs. J. W. Savage, Miss Gussie, at home and Frank W. Baker.

"The death of Mrs. Baker here a few years ago was the occasion of much saddness among the Bloomington friends of the family, as well as old-time acquaintances in Champaign. She was buried in the latter city."

b From newspaper clipping ? y Bulletin, Friday, Sept.

MR. AND MRS. WILLIAM H. BAKER AND FAMILY

1. Christoph 1 Baker
2. William 1 Baker
3. George 1 Baker
4. Louise 1 Baker
5. Georgiana 1 Baker
6. Henry 1 Baker
7. Johanna 1 Baker
8. August 1 Baker

Christoph 1 Baker, (1),

b. d. Lived in Leavenworth, Kansas.
m. Maggie 1902
b. d.

Children:

9. a Christie 2 b. m.
Lived in Chicago.

10. b Maggie 2 b. m.
Lived in Leavenworth, Kansas.

William Henry 1 Baker, (2)

b. August 17, 1844 d. Lived at Bloomington and
m. Mary Witt on 1859 Champaign, Illinois.
b. . d Jan. 4. 1905

Children:

11. a 2 b. m. Mr. Thomas H. Ramage
12. b 2 b. m. Mr. B. H. Hayes
13. c 2 b. m. Mr. J. W. Savage
14. d Gussie 2 b. m.
14.1. e Frank 2 b. m.

George 1 Baker, (3)

b. d. Lived at Monee and White Hall,
m. d. Illinois
b. d.

Children:

Louise 1 Baker, (4)

b. d. Lived at Monee, Illinois
m. Fred Meyers
b. d.

Children:

Georgiana 1 Baker, (5)

b. Oct. 26, 1835 d. Oct. 25, 1911
m. William Beal on Lived on a farm near Basehor,
b. April 1, 1825 d. July 21, 1917 Kansas.

The following was translated from a German Prayer and Hymn Book that was published in Hannover, Germany, about 1841. This book belonged to Georgiana 1 Baker. It is now in the possession of Mr. and Mrs. Henry Beal, Basehor, Kansas.

"Georgine Bocker, from Sulbeck, Einbeck (County).
Born 26 October 1835
We went to America the 13th of June 1856 and arrived on the 15th of August.

And Louise died 15 March 1859 and the little children died 23 March 1859.

Johanna Georgine Wilhelmine Bocker born 26 October 1835.
Christened 15 November 1835

Mari(e) she died 9 November 1864
Wilhelm he died 14 July 1868
Emma she died 2 August 1868

Mina was born 22. September 1861
Mari(e) was born 29. March 1863
Wilhelm was born 11. October 1865
Emmi was born 25. July 1867
Alberth was born 19. October 1869
Anna was born 17. January 1871
August was born 5. August 1872
Wilhelm was born 23. July 1874
Heinrich was born 9. May 1876"

Children:

15.	a Minnie	2	b.	Sept. 22, 1861	m.	Charles Liebenow
	b Marie	2	b.	March 29, 1863	d.	Nov. 9, 1864
	c Wilhelm	2	b.	Oct. 11, 1865	d.	July 14, 1868
	d Emma	2	b.	July 25, 1867	d.	August 2, 1868
16.	e Albert	2	b.	Oct. 19 1869	m.	Nell Meade
17.	f Anne	2	b.	Jan. 17 1871	m.	James A. Regan
	g August	2	b.	Aug. 5, 1872	d.	
18.	h. Henry	2	b.	May 9, 1876	m.	Maude Harrod
19.	i William	2	b.	July 23, 1874	m.	Myrtle Stafford

Henry 1 Baker, (6)

b. Jan. 9, 1831 **(note a)**
m. on
b. d.

Children:

Johanna 1 Baker, (7)

b. Sept. 13, 1837 d. Sept. 23 1919
m. Frederick Elling on Jan. 5, 1857
b. Nov. 14, 1829 d. Sept. 3, 1912

Children:

(See Elling section).

Note a

The following was translated from a German Bible written by Dr. Martin Luther, published in Germany in 1841. Mr. and Mrs. Henry Beal are the present owners of this bible.

"This book belongs to Heinrich Bocker, in Sulbeck, born 9 January 1831" The letters "o" in Bocker and "u" in Sulbeck, have two dots over them.

MR. AND MRS. FRED MEYERS

MRS. GEORGIANA BAKER BEAL

MR. WILLIAM BEAL

August 1 Baker, (8)

b. April 21, 1842 d. Oct. 4, 1909 Lived at Piper, Kansas
m. Mina Falke on
b. March 31, 1848 d. Sept. 19, 1919

Children:

20.	a William	2	b. Sept. 5, 1871	m. Minnie Robker
21.	b Christopher	2	b. Oct. 27, 1872	m. Susie Polfer
22.	c Frank	2	b. Nov. 8, 1874	m. Elizabeth Dister
23.	d August, Jr	2	b. Aug. 31, 1876	m. Louise Marxem

CHAPTER VIII

THE SECOND GENERATION

Minnie 2 Beal, (15), (Georgianna 1 Baker)

b.	Sept. 22, 1861 Platte City, Mo.	d. July 12, 1936	Lived at Basehor, Kansas
m.	Charles Liebenow	on March 17, 1885	
b.	1853, Berlin, Ger.	d. Feb. 7, 1935	

Children:

	a Lillie	3	b. Dec. 15, 1886	m.	on Feb. 3, 1908
				d.	Feb. 14, 1958
24.	b Henry	3	b. Aug. 4, 1889	m.	Lois Marshall
	c Charles	3	b. Dec. 23, 1890	m.	never married
	d Anna	3	b. Feb. 4, 1892	m.	Leslie Moyer
				d.	May 3, 1932
	e Herman	3	b. Jan. 27, 1894	m.	never married
				d.	July 13, 1956
	f Margarte	3	b. Dec. 20, 1895	m.	Archie Foree
	g Clara	3	b. Aug. 27,1901	m.	W. M. Hevak

Albert 2 Beal, (16), (Georgiana 1 Baker).

b.	Oct. 19, 1869	d.	1941
m.	Nell Meade	on	
b.		d.	

Children:

None

Anne 2 Beal, (17), (Georgiana 1 Baker)

b.	Jan. 17, 1871	d.	Nov. 30, 1909
m.	James A. Regan	on	
b.		d.	

MRS. ANNE REGAN IS DEAD

Wife of James A. Regan,

Guard at the Military Penitentiary

"Mrs. Anne Regan, 37 years od, died at Cushing Hospital yesterday afternoon from Bright's Disease, from which she had been suffering for a long time.

"The deceased was the daughter of William Beal of Fairmount. Her husband is James R. Regan, a guard at the Military Prison.

"The body of Mrs. Anne Regan, who died at Cushing Hospital Tuesday, will be taken to her father's home at Fairmount today. The funeral will be held Friday and the remains will be buried in the family lot at Mount Muncie."

MR. ALBERT BEAL

MRS. ALBERT BEAL

MRS. ANNE BEAL REGAN

MR. JAMES A. REGAN

25. a James Francis 3 b. Nov. 28, 1909 m. Arlene May Green

Mrs. Anne Regan died two days after James Francis was born. James Francis was adopted and raised by his grandparents, Mr. and Mrs. William Beal.

Henry 2 Beal, (18), (Georgiana 1 Baker)

b. May 9, 1876 Living near Basehor, Kansas
m. Maude Harrod on Oct. 26, 1898
b. Aug. 18, 1882

Children:

26. a. Pearl E. 3 b. Aug. 1, 1900 m. Walter H. Cochran
27. b Edna 3 b. May 4, 1902
28. c Claude H. 3 b. June 1, 1912 m. Virginia Porter
29. d Myrtle M. 3 b. April 24, 1916 m. Earl Dohrn

William 2 Beal, (19) (Georgiana 1 Baker)

b. July 23, 1874 d.
m. Myrtle Stafford
b. d.

Children:

William 2 Baker, (20), (August 1 Baker)

b. Sept. 5, 1871 d. Nov. 23, 1930 Lived at Fairmount, Kansas
m. Minnie Sophie Robker on Jan. 26, 1898
b. Jan. 5, 1874 d. Dec. 17, 1955

Children:

30. a Dorothy Helen 3 b. Feb. 17, 1899 m. Henry Wenzel
31. b Mable Charlotte 3 b. June 19, 1902 m. Chester Klinkenburg

Christopher 2 Baker, (21), (August 1 Baker)

b. Oct. 27, 1872 d. June 9, 1916
m. Susie Polfer on Nov. 28, 1900
b. May 13, 1874 d. Nov. 17, 1955

Children:

32. a Alfred Earl Sr. 3 b. Mar. 1, 1903 m. Amelia Sewell
33. b Charles Frank 3 b. Nov. 8, 1908 m. Martha Ruth Caldwell
34. c Ruth Marie 3 b. Oct. 23, 1913 m. Harold Elwood Schlosser

Frank 2 Baker, (22), (August 1 Baker)

b. Nov. 8, 1874 d.
m. Elizabeth Dister
b. d.

Children:

35. a Herbert 3 b. d. in infancy
b Helen 3 b

August 2 Baker, (23), (August 1 Baker)

b. August 31, 1876 Living in Piper, Kansas
m. Louise Marxem on Sept. 16, 1901
b. Feb. 3, 1885

Children:

36 a Jesse 3 b. Sept. 21, 1902 m. Dewey Cunningham
37. b Edna 3 b. Sept. 4, 1910 m. Joe Burns

MR. and MRS. HENRY BEAL

MR. WILLIAM BEAL

MRS. MYRTLE STAFFORD BEAL

MR. AND MRS. WILLIAM BAKER

MR. ANS MRS. CHRISTOPHER BAKER

MR. AND MRS. FRANK BAKER

MR. AND MRS. AUGUST BAKER

THE SECOND GENERATION
ADDITIONAL NOTES

THE BAKER AND BEAL FAMILIES
ADDITIONAL NOTES

CHAPTER IX

THE THIRD GENERATION

Henry 3 Liebenow, (24), (Minnie 2 Beal, Georgiana 1 Baker)

b. Aug. 4, 1889 Living at Bonner Springs, Kans.
m. Lois Marshall on June 23, 1923
b. April 19, 1902

Children:

none

James Francis 3 Beal, (25), (Anne 2 Beal, Georgiana 1 Baker)

b. Nov. 28, 1909 Living at Abilene, Texas
m. Arlene Greene on Nov. 4, 1942
b.

Children:

a Arline Frances 4 b. July 4, 1943 d. July 26, 1944
37.1 b Carol Faye 4 b. July 2, 1950

Pearl E. 3 Beal, (26), (Henry 2 Beal, Georgiana 1 Baker)

b. Aug. 1, 1900 Living at Kansas City, Kans.
m. Walter H. Cochran Aug. 30, 1923
b. Jan. 30, 1896

Children:

38. a Dorothy Mae 4 b. Oct. 16, 1927 m. Donald Hoff
39. b Norma Jean 4 b. Mar. 2, 1929 d. Sept. 11, 1929

Claude H. 3 Beal, (28), (Henry 2 Beal, Georgiana 1 Baker)

b. June 1, 1912 d. Nov. 19, 1952
m. Virginia Porter
b.

Children:

40. a Gary 4 b. May 4, 1937

Myrtle M. 3 Beal, (29), (Henry 2 Beal, Georgiana 1 Baker)

b. April 24, 1916
m. Earl Dohrn on Jan. 28, 1939
b. Feb. 8, 1911 Living at Kansas City 14, Mo.

Children:

None

Dorothy Helen 3 Baker, (30), (William 2 Baker, August 1 Baker)

b. Feb. 17, 1899 Living at Lansing, Kansas
m. Henry Wenzel on Feb. 14, 1927
b. Nov. 5, 1901

Children:

40.1 a William Henry 4 b Aug. 27, 1928

Mable Charlotte 3 Baker, (31), (William 2 Baker, August 1 Baker)

b. June 19, 1902 d. March 1, 1946 Lived at Basehor, Kansas
m. Chester Klinkenburg on May 16, 1928
b. June 1, 1903

Children:

40.2 a Jerry Gene 4 b May 4, 1938

Alfred Earl 3 Baker, (32), (Christoph 2 Baker, August 1 Baker)

b. March 1, 1903 Living at Leavenworth, Kans.
m. Amelia Sewell on Sept. 19, 1929
b. April 25, 1910

Children:

41. a Howard Eugene 4 b. Nov. 9, 1931 m. Evelyn Yunghans
42. b Alfred Earl, Jr. 4 b. Nov. 5, 1935 m. Elizabeth Stucky

Charles Frank 3 Baker, (33), (Christoph 2 Baker, August 1 Baker)

b. Nov. 8, 1908 Living at Kansas City, Kans.
m. Martha Ruth Caldwell on Oct. 27, 1946
m. June 20, 1908

Children:

43. a Martha Sue 4 b. April 3, 1950

Ruth Marie 3 Baker, (34), (Christoph 2 Baker, August 1 Baker)

b. Oct. 23, 1913 Living at Kansas City, Kans.
m. Harold Elwood Schlosser on July 20, 1935
b. Feb. 8, 1913

Children:

44. a Bruce Elwood 4 b Sept 6, 1941
45. b Bryon Rex 4 b. March 17, 1946
46. c Sue Ann 4 b. Aug. 14, 1952

Jesse 3 Baker, (36), (August 2 Baker, August 1 Baker)

b. Sept. 21, 1902 Living at Kansas City, Kans.
m. Dewey Cunningham on May 15, 1920
b. Feb. 3, 1898

Children:

47. a Harold Arthur 4 b. Feb. 17, 1921 m. Dorothy Mancer
48. b Lester Baker 4 b. March 24, 1924 m. Florence Hargens Newman

Edna 3 Baker, (37), (August 2 Baker, August 1 Baker)

b. Sept. 4, 1910 Living at Piper, Kansas
m. Joe Burns on Aug. 11, 1934
b. May 5, 1909 d. Feb. 9, 1958

Children:

49. a Myron James 4 b. Oct. 1, 1944
50. b Mary Lou 4 b. May 2, 1940
51. c Gerald Lynn 4 b. Feb. 17, 1942

THE THIRD GENERATION

ADDITIONAL NOTES

THE BAKER and BEAL FAMILIES

ADDITIONAL NOTES

THE THIRD GENERATION

ADDITIONAL NOTES

THE BAKER and BEAL FAMILIES

ADDITIONAL NOTES

CHAPTER X

THE FOURTH GENERATION

Dorothy Mae 4 Cochran, (38), (Pearl 3 Beal, Henry 2 Beal, Georgiana 1 Baker)

b. Oct. 16, 1927 Living at Olathe, Kansas
m. Donald Hoff on Aug. 14, 1949
b. Feb. 24, 1925

Children:

51:1 a Donna Susan 5 b Sept. 3, 1953
51.2 b Douglas Donald 5 b. Sept. 1, 1954

Howard Eugene 4 Baker, (41), (Alfred Earl 3 Baker, Christoph 2 Baker, August 1 Baker)

b. Nov. 9, 1931 d. Jan. 23, 1957
m. Evelyn Yunghans on March 13, 1955
b. Oct. 4, 1935

Children:

52. a Rodney Lee 5 b March 13, 1956

Alfred Earl, Jr. 4 Baker, (42), (Alfred Earl 3 Baker, Christoph 2 Baker, August 1 Baker)

b. Nov. 5, 1935
m. Elizabeth Stucky on May 12, 1957
b. June 6, 1936

Children:

52.1 a Jon Christian 5 b. Aug. 29, 1959

Harold Arthur 4 Cunningham, (47), (Jesse 3 Baker, August 2 Baker, August 1 Baker)

b. Feb. 17, 1921
m. Dorothy Mancer on May 27, 1944
b. April 1, 1920

Children:

53. a Alan Ray 5 b. Jan. 28 ,1946
54. b Carol Ann 5 b. Jan. 17, 1948

Lester Baker 4 Cunningham, (48), (Jesse 3 Baker, August 2 Baker, August 1 Baker)

b. March 24, 1924
m. Florence Hargens Newman on Aug. 4, 1951
b. Sept. 26, 1921

Children:

None

THE BAKER and BEAL FAMILIES

ADDITIONAL NOTES

THE FOURTH GENERATION
ADDITIONAL NOTES

THE BAKER AND BEAL FAMILIES
ADDITIONAL NOTES

THE FOURTH GENERATION
ADDITIONAL NOTES

THE BAKER AND BEAL FAMILIES
THE FIFTH GENERATION
ADDITIONAL NOTES

THE FIFTH GENERATION
ADDITIONAL NOTES

THE BAKER AND BEAL FAMILIES
ADDITIONAL NOTES

THE FIFTH GENERATION
ADDITIONAL NOTES

INDEX

Badenhops, Anna 14
Baker, Alfred Earl, Jr. 4 (42) 62, 63
Baker, Alfred Earl, Sr. 3 (32) 60, 62
Baker, August 1 (8) 19, 52, 56, 58
Baker, August 2 (23) 58, 60
Baker, Charles Frank 3 (33) 60, 62
Baker, Christie 2 (9) 56
Baker, Christoph 1 (1) 19, 56
Baker, Christoph 2 (21) 58, 60
Baker, Dorothy Helen 3 (20) 60, 61
Baker, Edna 3 (37) 60, 62
Baker, Frank 2 (14.1) 56
Baker, Frank 2 (22) 58, 60
Baker, George 1 (3) 19, 56
Baker, Georgiana 1 (5) 19, 56
Baker, Gussie 2 (14) 56
Baker, Helen 3 60
Baker, Henry 1 (6) 19, 56, 57
Baker, Herbert 3 (35) 60
Baker, Howard Eugene 4 (41) 62, 63
Baker, Jesse 3 (36) 60, 62
Baker, Johanna 1 (7) 19, 50, 56, 57
Baker, Jon Christian 5 (52.1) 63
Baker, Louise 1 (4) 19, 56
Baker, Mable Charlotte 3 (31) 60, 62
Baker, Maggie 2 (10) 56
Baker, Martha Sue 4 (43) 62
Baker, Rodney Lee 5 (52) 63
Baker, Ruth Marie 3 (34) 60, 62
Baker, William 2 (20) 58, 60
Baker, William H. 1 (2) 19, 54, 56
Barton, Morland 39, 47
Barton, Pamela Jean 5 (98.1) 47
Bates, Edward 33
Beal, Albert 2 (16) 57, 59
Beal, Anne 2 (17) 57, 59
Beal, Arline Francis 4 61
Beal, August 2 57
Beal, Carol Faye 4 (37.1) 61
Beal, Claude H. 3 (28) 60, 61
Beal, Edna 3 (27) 60
Beal, Emma 2 57
Beal, Gary 4 (40) 61
Beal, Henry 2 (18) 57, 60
Beal, James Francis 3 (25) 60, 61
Beal, Marie 2 57
Beal, Minnie 2 (15) 57, 59
Beal, Myrtle M. 3 (29) 60, 61
Beal, Pearl E. 3 (26) 60, 61
Beal, Wilhelm 2 57
Beal, William 56
Beal William 2 (19) 57, 60
Bemcke, Marie Engel 10, 11
Bernhart, Amelia 20, 25
Bethke, Walter A. 40, 48

INDEX

Blacet, J. E. 24, 38
Black, Clara Libbie 34, 42
Bocker, Johann Christian Ludwig (G-41) 50
Bocker, Johanna (G-41.1) 50
Bode, Johanna Catharine Elisabeth 50
Boecker, Christoph 50
Boecker, Johann Christian (G-40) 50
Boles, John David 4 (94) 46
Boles, John William 36, 46
Boles, Mary 4 (95) 46
Bostelmann, Anna Marie (G-32) 14, 16, 17
Bostelmann, Johann (G-29) 14, 15
Bostelmann, (G-30) 14, 15
Bostelmann, Jurgen Henrich Christoph (G-31) 14, 16, 18
Bostelmann, N. (G-28) 14
Bredel, Frank 38
Bullock, Charlotte Jean 5 (106) 48
Bullock, Harry G. 41, 48
Bullock, Patrecia Joyce 5 (105) 48
Burcham, Geraldine Ruth 36, 43
Burns, Gerald Lynn 4 (51) 62
Burns, Joe 60, 62
Burns, Mary Lou 4 (50) 62
Burns, Myron James 4 (49) 62

Caldwell, Martha Ruth 60, 62
Carstens, Catharina 9, 10
Castens, Catharina Magdalene (G-35) 8, 11, 12, 14, 17
Castens, Hinrich (G-33) 14, 16, 17
Castens, Hinrich (G-34) 17
Chartier, Emery 26, 40
Chartier, Janell 4 (45) 40, 47
Cochran, Dorothy Mae 4 (38) 61, 63
Cochran, Norma Jean 4 (39) 61
Cochran, Walter H. 60, 61
Cohrs, Catharina Margretha 17
Cooke, Ruth 36, 45
Cornforth, Ruth 26, 39
Cours, Margaretha Anna 14, 15
Cunningham, Alan Ray 5 (53) 63
Cunningham, Carol Ann 5 (54) 63
Cunningham, Dewey 60, 62
Cunningham, Harold Arthur 4 (47) 62, 63
Cunningham, Lester Baker 4 (48) 62, 63

DeLaCruz, Jerry 5 (102) 47
DeLaCruz, Leonard 40, 47
DeLaCruz, Paul 5 (101) 47
Dister, Elizabeth 58, 60
Dittmer, Catharina Marie 11, 12
Dodge, Johnny 24
Dohrn, Earl 60, 61
Douglas, Norma Lee 35, 43
Ducker, Engel Rosine Luise 50

Ebeling, Maria Engel 9

INDEX

Elling, Adolf 1, 13
Elling, Albert 2 (10) 20, 34
Elling, Albert Lee 3 (30) 35, 43
Elling, Alvin Elmer 3 (17) 26, 40
Elling, Anna 2 (6) 20, 30
Elling, Anna Johanna 20
Elling, Ansel 3 35
Elling, Ardith Ann 4 (59) 42
Elling, August 2 20
Elling, Bernard 2 (4) 20, 25
Elling, Bernice Eva 3 (16) 26, 40
Elling, Beverly Jane 4 (82) 44
Elling, Carl Emmert 3 (24) 34, 41
Elling, Carl G. 2 (11) 20, 35, 44
Elling, Carl Mudge 3 (32) 36, 43
Elling, Carl Mudge, Jr. 4 (80) 44
Elling, Catharina Engel 8 (G-17) 11
Elling, Catharina Marie 9 (G-24) 12
Elling, Christine N. 3 (27) 34, 42
Elling, Christoph 2
Elling, Christoph 19, 20
Elling, Christoph George Friedrich 20
Elling, Cynthia Nell 4 (60) 42
Elling, David Lee 4 (77) 43
Elling, Danny Lee 4 (72) 43
Elling, Deborah, 4 (48) 40
Elling, Dorothea Magdalene 9 (G-26) 12
Elling, Eduard 3
Elling, Edward Fahey 4 (89.1) 45
Elling, Edward Gail 4 (70) 43
Elling, Edward Himes 3 (35) 36, 45
Elling ,Edward J. 2 (8) 20, 32
Elling, Edwin Gene 4 (71) 43
Elling, Eunice Jesse 3 (31) 35, 43
Elling, Freda 2 20
Elling, Freda 3 26
Elling, Frederick 1 (1) 1, 8, 19, 57
Elling, Fritz Heinrich - Friedrich Wilhelm 2
Elling, Georg Heinrich Christoph 8 (G-20) 1, 4, 8, 12, 13
Elling, George F. 2 (3) 20, 24
Elling, George Franklin 4 (88) 45
Elling, George Frederick Heinrich 20
Elling, George Friedrich Heinrich 1
Elling HanS (G-1) 9
Elling Hans Hinrich Wilhelm 9 (G-24) 12, 13
Elling, Hans Jacob 2
Elling, Hans Wilhelm 2
Elling Heinrich 2
Elling Heinrich Christoph 2
Elling, Heinrich Christoph 9 (G-27) 12, 13
Elling, Heinrich Friedrich 2, 13
Elling, Heinrich Friedrich 8 (G-19) 12
Elling, Heinrich Jacob 1
Elling, Heinrich Jacob (G-13) 14, 17
Elling, Heinrich Jacob 4, 8

INDEX

Elling, Heinrich Jacob Christoph 8 (G-23) 12
Elling, Helen Wilhelmina 3 (38) 36, 46
Elling, Hellen Rachel 3 (22) 34, 41
Elling, Henrich Christoph 8 (G-16) 11
Elling, Henrich Friedrich 8 (G-18) 11, 12, 13
Elling, Henrich Jacob 8 (G-15) 11
Elling, Henry Carl 4 (61) 42
Elling, Homer Richard 3 (36) 36, 45
Elling, Inas 3 26
Elling, James Edward 4 (44) 39
Elling, Janet 4 (86) 45
Elling, Jean Anne 4 (65.1) 42
Elling, Jerry Wayne 4 (69) 43
Elling, Joan Elaine 4 (83) 44
Elling, Joe Kerry 4 (64) 42
Elling, Johann Friedrich Peter 8 (G-22) 8, 12, 13, 50
Elling, Johann Jacob 6 (G-10) 10, 11
Elling, Johann Peter 8 (G-21) 12, 13
Elling, Johann Wilhelm 8 (G-14) 11, 12
Elling, Johanna August 20
Elling, Johanna Louise Georgine 20
Elling, John Karl 4 (87) 45
Elling, John Otto 4 42
Elling, John Wallace 3 (34) 36, 45
Elling, Judy Ann 4 (78) 43
Elling, Judy Lorene 4 (43) 39
Elling, Karen Sue 4 (57) 42
Elling, Karl-Heinz 2, 13
Elling, Kermit Edward 3 (28) 34, 43
Elling, Dr. Laddie Joe 3 (26) 34, 42
Elling, LaRoy Edward 3 (15) 26, 39
Elling, Laurie 4 (49) 40
Elling, Louise 2 (2) 20, 24
Elling, Magdalena Margaretha Christine Marie 20
Elling, Marel Lynn 4 (58) 42
Elling, Margaret Louise 3 (23) 34, 41
Elling, Mariann 4 (84) 44
Elling, Mary 3 36
Elling, Mary Elizabeth 4 (65) 42
Elling, Mary Margaret 4 (89) 45
Elling, Mary Maxine 3 (37) 36, 45
Elling, Melvin 3 26
Elling, Michael 4 (46) 40
Elling, Minnie 2 (7) 20, 31
Elling, Rev. Otto H. 3 (25) 34, 42
Elling, Otto Henry 2 (9) 20, 33
Elling, Patsy Jeanne 4 (91) 45
Elling, Peter Johann 1, 13
Elling, Randy Kermit 4 (74) 43
Elling, Rhonda Kaye 4 (73) 43
Elling, Ricka 2 (5) 20, 26
Elling, Olive 20
Elling, Robert Dee 4 (81) 44
Elling, Roland Baker 3 (33) 36, 44
Elling, Roland James 4 (85) 45

Elling, Ronald Wesley 4 (62) 42
Elling, Ronda Janelle 4 (63) 42
Elling, Rose Ruth 3 (29) 35, 43
Elling, Susan Lynn 4 (79) 43
Elling, Sylvia Mae 3 (14) 26, 38
Elling, Timothy 4 (47) 40
Elling, Wilhelm Frederick Christian 20
Ellinges, Albert 3 (G-5) 9
Ellinges, HanS 3 (G-4) 9
Ellinges, Michael 2 (G-2) 9
Ellinges, Michael 4 (G-6) 9, 10
Ellinges, Wilhelm 4 (G-7) 9
Ellings, HanS 5 (G-8) 10
Ellings, Hans Jurgen 6 (G-9) 10, 11
Ellings, Hans Wilhelm 7 (G-11) 11
Ellings, Heinrich Jacob 7 (G-13) 11, 12, 17
Ellings, Johann Heinrich 7 (G-12) 11, 12
Ellings, Karsten 2 (G-3) 9

Fabey, Virginia Rose 36, 45
Falke, Mina 58
Farrell, Melva Lee 5 (98) 47
Farrell, Mike 5 (96) 47
Farrell, Walter 5 (97) 47
Farrell, William R. 39, 47
Fisher, Elizabeth 20, 26
Fisher, Ellen 20, 26
Fisher, Faye Eva 3 (19) 29, 40
Fisher, John, Sr. 20, 26
Fisher, John Ulrich 20, 26
Fisher, Joseph 20, 26
Fisher, Louis 20, 26
Fisher, Martha "Mattie" 20, 26
Fisher, Tura Minnie 3 (18) 29, 40
Forbis, Jackie Ralph 4 (42) 39
Forbis, John 26, 38
Forbis, Johnie Mae 4 (41) 39, 47
Forbis, Mavone Ruby 4 (39) 39, 47
Forbis, Patsy Jean 4 (40) 39, 47
Foree, Archie 59
Franzen, Katharina 1, 19
Furhop, Albert (G-37) 18
Furhop, Catharine Elizabeth (G-39) 14, 16, 18
Furhop, Hans (G-36) 18
Furhop, Hans Henrich (G-38) 18

Gorneman, Johanna Caroline 1
Greene, Arlene 60, 61
Grimm, Artie M. 39, 47
Grimm, Cherie Lynn 5 (99) 47
Grimm, Theresa Ann 5 (100) 47

Hammond, John Louis 29, 40
Hanna, Donald L. 41, 48
Harding, Anita Kay 4 (55) 41
Harding, Marion Edwin 34, 41
Harrod, Maude 57, 60

INDEX

Hausbrand, Oskar 5
Hawthorne, Florence 34, 41
Hayes, B. H. 56
Hebenbrock, Anne Marie 13
Herbert, Albert 25
HeSen, Anna Ilse 10, 11
Hesse, Dorothea Sophie 50
Hevak, W. M. 59
Hewitt, George Dale 40, 48
Hewitt, George Dale, Jr. 5 (103) 48
Hilty, Mattie 20
Hoff, Donald 61, 63
Hoff, Donna Susan 5 (51.1) 63
Hoff, Douglas Donald 5 (51.2) 63
Hogrefe, Catharina 18

Jameson, James Ralph 37
Jameson, Kenneth Ralph 37
Jamesson, Kenneth Ralph 37
Jameson, Maxine Elizabeth 37
Jameson, Milton Alonza 37
Jones, Brent Ernest 4 (76) 43
Jones, Donald Lee 4 (75) 43, 49
Jones, Ernest C. 35, 43

Kastens, Catherine Magdalene 4
Klamm, Freddie 3 24
Klamm, Louis 3 24
Klamm, Margaret Emile 3 24
Klamm, Minnie Elizabeth 3 (13) 24, 38
Klamm, Otto Elling 3 (12) 24, 38
Klamm, Phiilp 20, 24
Klinkenburg, Chester 60, 62
Klinkenburg, Jerry Gene 4 (40.2) 62
Kruse, Marie Christine Luise 12, 13

Liebenow, Anna 3 59
Liebenow, Charles 57, 59
Liebenow, Charles 3 59
Liebenow, Clara 3 59
Liebenow, Henry 3 (24) 59, 61
Liebenow, Herman 3 59
Liebenow, Lillie 3 59
Liebenow, Margarte 3 59
Lowe, Carol Diane 49

Magrath, Marcella Therese 26, 40
Mancer, Dorothy 62, 63
Marshall, Lois 59, 61
Marxen, Louise 58, 60
Mayse, Meredith Leon 36, 45
Mayse, Michael Robert 4 (93) 45
Mayse, Patricia Ann 4 (92) 45
McCord, Suzanne Joy 4 (90) 45
Meade, Nell 57, 59

INDEX

Meier, Catharine Marie 11, 12
Mencke, Anne Dorothea 11, 12
Meyer, Maria 10
Meyer Sanitary Milk Co. 32, 34
Meyers, Fred 56
Miller, Anna E. 41, 48
Moyer, Leslie 59
Mudge, Mary 20, 35

Newman, Florence Hargens 62, 63
Norden, Elisabeth 14, 15
Norden, Mette 18

Oelfken, Anna Ilse 11

Penny, John 35, 43
Penzhorn, Anna Maria 10, 11
Penzhorn, Catharina 11, 12
Pickering, Ida Jeanne 36, 45
Poggemeyer, Clara 24, 38
Polfer, Susie 58, 60
Pool, Hellen Mae 20, 33
Porter, Virginia 60, 61

Renfro, Faye Alpha 4 (50) 40, 47
Renfro, David Harrison 29, 40
Robker, Minnie 58, 60
Regan, James A. 57, 59
Ramage, Thomas H. 56

Savage, J. W. 56
Schlosser, Bruce Elwood 4 (44) 62
Schlosser, Bryon Rex 4 (45) 62
Schlosser, Harold Elwood 60, 62
Schlosser, Sue Ann 4 (46) 62
Schluter, Henrike Justine (G-44) 50
Schluter, Johann Andreas (G-42) 50
Schluter, Johann Justus Gerhard (G-43) 50
Schmidt, ... 20
Secrist, Alma Bethene 34, 42
Seelen, Dorothea Margareta 50
Sewell, Amelia 60, 62
Shaw, Francis 20, 36
Shelton, Rose Abeline 20, 32
Sills, Anna 20, 24
Smith, Joyce Maxine 4 (53) 41, 48
Smith, Linda Diana 5 (104) 48
Smith, II, Robert 29, 40
Smith, III, Robert 4 (51) 41, 48
Smith, Thelma Levone 4 (52) 41, 48
Stafford, Myrtle 60
Steinbeck, William F. 24, 38
Steincke, Anne Elizabeth 10, 11
Stricker, Antony Elling 4 (66) 42
Stricker, Teresa Hellen 4 (67) 42
Stricker, William 34, 42

INDEX

Stricker, William Charles 4 (68) 42
Stucky, Elizabeth 62, 63
Stuhlmacher, Hans 6, 8, 18
Sutherland, Norma Janice 41, 49

Terrett, Joe Elling 4 (56) 41, 48
Terrett, Joe Merrell 34, 41
Terrett, Martin Jan 5 (108) 49
Terrett, Robin Jo 5 (107) 49
Tietken, Anna 18
Traupe, Maria Hedwig 50

Vincent, Eleanor Louise 36, 44

Way, Cora Ellen 20, 34
Wenzel, Henry 60, 61
Wenzel, William Henry 4 (40.1) 61
Whitehead, Evelyn Leola 34, 43
Wischof, Marie Engel 11
Witt, Mary 56
Wright, Albert Lee 20, 30
Wright, Carolyn 4 (54) 41
Wright, Harley M. 3 (20) 30. 41
Wright, Noah Frederick 3 (21) 30. 41

Yunghans, Evelyn 62, 63